LIGHTING CATALOG

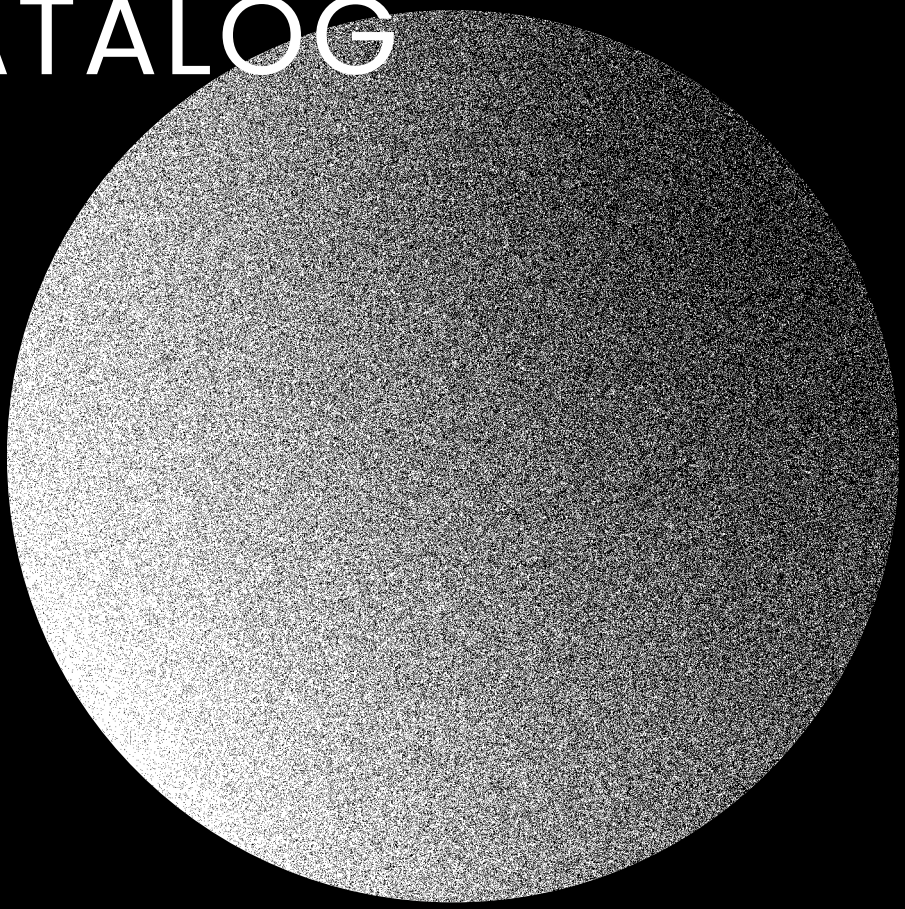

24 | 25

CÛBEE
三一東林集團

CUBEE could be different

在德文中 Cubee 發音為 "kud-bi"
『 Could Be Different 』正是三一照明的品牌精神。

HEP Group founded in April 2002 as a manufacturer of electric light source drive components, LED Drivers and lighting products such as electronic transformers and samrt lighting controls, which are sold under its own German brand 'HEP' In April 2021, the company set up the Automotive Technology Division, which engages in the sale of ready-made vehicles with tuning brands, repair and maintenance, and customised package tuning services. - High-reliability Electronic Performance (HEP) represents our commitment to our customers in terms of quality, service and value, satisfying their needs and looking forward to becoming a strategic partner in innovation.

三一東林集團創立於 2002 年 4 月，為電光源驅動元件製造廠，LED Driver 及電子式變壓器及智能照明控制等照明產品，並透過自有德國品牌「HEP」銷售。
2021 年 4 月，公司成立汽車科技事業部，從事改裝品牌成車銷售、維修與保養及客製化套件改裝服務。
HEP — High-reliability Electronic Performance 代表我們對顧客在品質、服務與價值感上的承諾，滿足顧客需求，也期盼與顧客成為創新事業的策略夥伴。

Global Locations

全球據點

China
中國

HEP

WeiSen Electronic Co., Ltd.
威森電子 (珠海) 有限公司

Electronic Manufacturing Factory
電子驅動器生產工廠

叁壹 CUBEE PLAZA

CUBEE Tech (Shanghai), Inc.
叁壹科技 (上海) 有限公司

Automobile & Lighting Business
Great China Flagship & Center
頂級汽車及照明銷售展示中心

Taiwan
台灣

Taipei 台北

CUBEE PLAZA

CUBEE PLAZA
台北汽車及照明銷售展示中心

Premium car showroom and sales center
頂級汽車展間及銷售中心

CUBEE

Cubee Lighting Technology Co.
三一照明科技股份有限公司

Taipei Lighting Experience Center
台北照明體驗館及銷售中心

Taichung 台中

HEP

HEP Technology
三一東林科技股份有限公司

Management, global sales team, R&D and design center
三一東林全球研發中心

CUBEE PLAZA

CUBEE PLAZA
台中七期汽車及照明銷售展示中心

Taichung Automotive and Lighting Exhibition Centre
頂級汽車及照明銷售展示中心

Germany
德國

HEP

HEP GmbH (Schalksmühle)

Electronic Drive EMEA Sales Center, Warehouse, KEMA Certified Laboratory
電子驅動器歐洲銷售中心、倉儲、KEMA 認證實驗室

ON

ON Lichttechnik GmbH

EMEA Sales Centre for High-end Commercial Lighting and Motorized Lighting
商業照明及電動燈具歐洲銷售中心

HEP Group Timeline

三一東林集團歷史沿革

2000 2001 2002 2003 2005 2008 2009 2010 2011 2015 2020 2021 2023

2001
WeiSen Electronic Co., Ltd. founded.
威森電子成立

2002
HEP Group founded in Taiwan
HEP 集團創立於台灣

2003
HEP GmbH EMEA established in Germany.
HEP GmbH EMEA 銷售總部成立

2008
Won the 17th National Panshi Award
榮獲第 17 屆國家盤石獎

2009
Taiwan HEP Headquarters established.
台灣營運總部進駐台中精密機械科技園區

2010
Passed 18001:2007 International Standard Certification
通過 18001:2007 國際標準認證

2011
HEP Tech IPO
財團法人證券櫃檯買賣中心上櫃

2020
ON Lichttechnik GmbH founded in Germany.
ON Lichttechnik GmbH 於德國成立

2021
Cubee.is joined the HEP Group and established the automotive technology business.
三一國際進駐，更名為三一東林
成立汽車科技事業群、電子科技事業群

2023
Established Cubee Lighting Technology
Announces entry into the integrated solutions market
Shanghai Cubee.is established Asia Pacific Automotive/Lighting Showroom
成立三一照明科技
宣告進入整合方案市場
上海叁壹科技成立
亞太區汽車 / 照明旗艦店

About Cubee

關於三一照明科技

Cubee Lighting Technology continues to bring brilliance to the lighting industry through its distinctive intelligent lighting technology and innovative ideas.
As a subsidiary of the HEP Group, a public company in Taiwan, we specialize in cutting-edge intelligent lighting fixture products, uniting a team full of vigor, drive, and creativity.
Our team comprises R&D engineers with 20 years of experience in LED lighting, a professional UI/UX design team, and experts in lighting design, consistently introducing unprecedented perspectives and visions to the lighting industry.We are deeply rooted in the field of intelligent lighting, pursuing continuous innovation through research and development.
This ensures that each luminaire exudes modern technology, catering to residential, commercial, and hospitality lighting needs. Our products are the epitome of taste and practicality.
As a member of the HEP Group, we benefit from substantial support and resources. Beyond our focus on lighting technology, Cubee.
Is is a leading company for world most famous customize car brand which integrate the strength of our company.

三一照明科技以其獨特的智能照明技術和創新的理念，持續為照明產業帶來耀眼的光芒。作為三一東林集團的子公司，我們以智能照明燈具產品為主導，匯聚了一支充滿活力、衝勁且富有創意的團隊。我們的團隊由擁有 20 年 LED 燈具的研發工程師、經驗豐富的介面設計團隊及照明設計專業人才所組成，持續帶給照明產業前所未有的視野與願景。我們深耕智能照明領域，同時追求不斷的創新，透過前瞻性的研發，讓每一款燈具都散發著現代科技的魅力。
無論是家居照明、商業照明或是飯店照明，我們的產品都是品味與實用兼具的極致之作。作為三一東林集團的一員，我們擁有龐大的支持與資源。不僅專注於照明科技，我們還擁有世界頂級豪車的銷售團隊 - 三一國際，為世界呈現創新的汽車科技。

In October 2023, we proudly announced the establishment of a new hub in Shanghai—Cubee.is Technology Shanghai, along with a globally renowned flagship car and lighting showroom, bringing us even closer to global customers and industries, jointly embracing future challenges.
Moreover, Cubee Lighting Technology's subsidiary, the esteemed German high-end lighting brand On Lichttechnik GmbH, showcases our dominance on the international stage. Germany's renowned craftsmanship and high-quality manufacturing have positioned On Lichttechnik GmbH as a provider of cutting-edge technology and innovative design concepts within the industry, collaborating with Cubee Lighting Technology to create even more outstanding lighting products.
With the substantial support of the HEP Group, we will persistently cultivate the international market, providing practical lighting solutions for users worldwide.

2023 年 10 月，我們驕傲地宣布在上海成立了新的據點——上海叁壹科技，並且擁有了傲視全球的亞洲汽車與照明旗艦展廳。
這使得我們更加緊密地與全球客戶及行業接軌，共同迎接未來的挑戰。
透過三一東林集團龐大的支持，我們將繼續深耕國際市場，同時為全球用戶提供更加實用的照明解決方案。

Awards

DESIGN PLUS
powered by: light + building

reddot design award
winner 2019

reddot winner 2021
lighting design

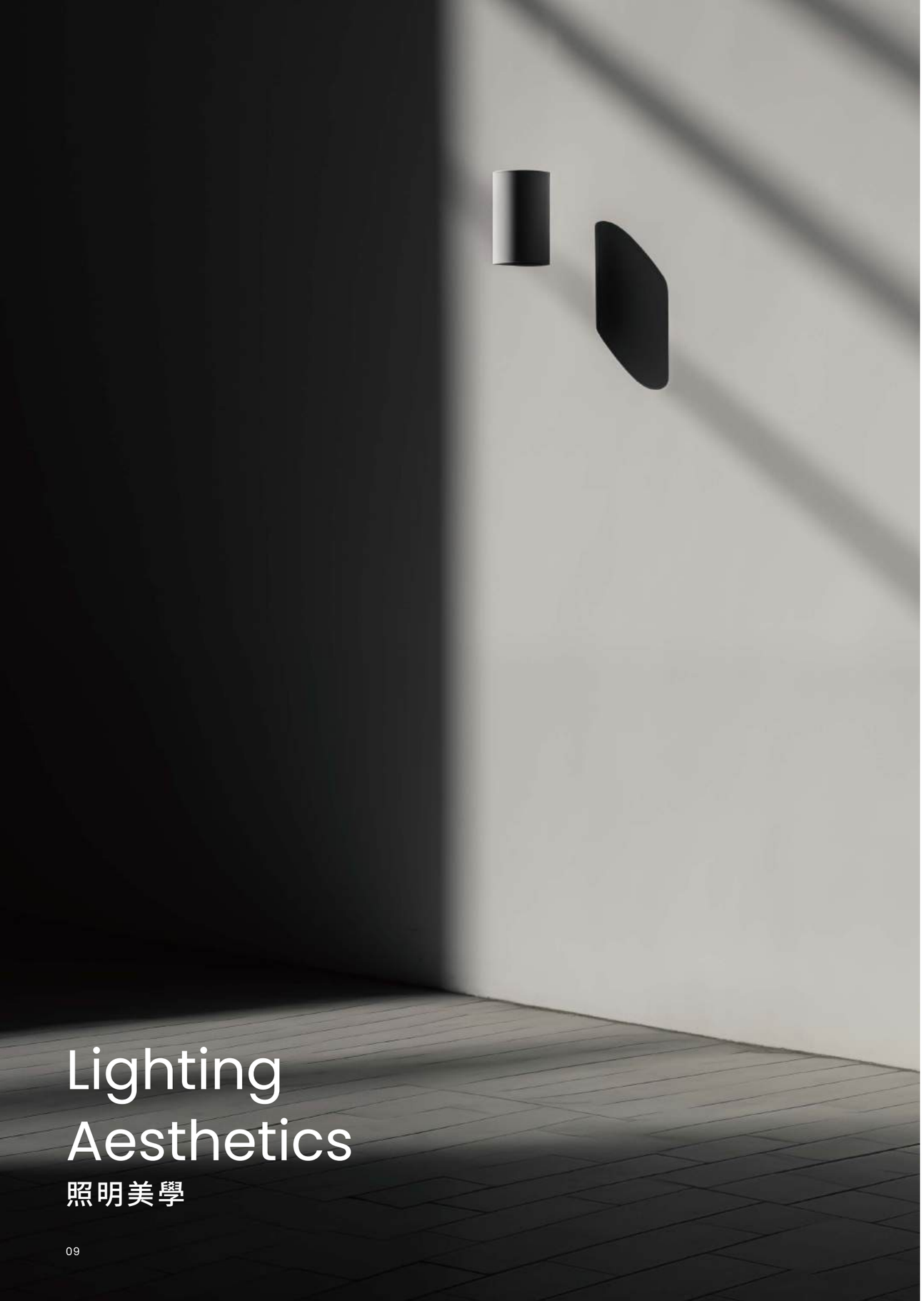

Lighting Aesthetics

照明美學

In the world of lighting, our lamps are not only simple light sources, but also carriers of aesthetics, bringing inspiration and emotion to the space. Each lamp is an expression of emotion, a pursuit of beauty. We are deeply in love with beauty and design each lamp with our heart, showing our passion for life and the relentless pursuit of beauty. Through carefully designed shapes, materials and light effects, our lamps add a breath of life to the space, making your home environment full of layers and full of warmth, as well as a tribute to the quality of life. Cubee makes lighting not just light, but a theater for realizing dreams and enhancing the story of quality of life.

在照明的世界裡，我們的燈具不僅是簡單的光源，更是美學的載體，帶來空間的靈動與情感。每一盞燈都是一種情感的表達，一種對美的追求。我們深深熱愛著美，用心設計每一款燈具，從中展現出我們對於生活的熱情和對於美的不懈追求。透過精心設計的造型、材質和光線效果，我們的燈具為空間增添了生命的氣息，讓您的家居環境充滿層次並充滿溫度，也是對生活品質的致敬。

三一讓照明不僅是光，而是實現夢想的劇場，提升生活品質的故事。

Product Overview

產品總覽

崁燈 Downlight

Tobias 39
Ami 43
Timo 49
Lena 53
Felix 55
Lite 59
Pascal 63
Olga 65
Lea 69

軌道燈 Track light

Ami 71
Mona 77
Alma 79
Mattis 83
Liya 85
Bruno 87
Bande 91
Rino 93
Cubie 95

磁吸燈 Maganet track light

Maga 103

吸頂燈 Ceiling light

Luisa 117
Luna 119

吊燈 Pendant light

Ami 123
Navia 125

電動燈具 Motorized lighting

RoboTrac 133
RoboCan 137
RoboRadar 143
RoboFocus 149

燈條 Strip

Strip 153

AMO Smart Lighting System

AMO 智能照明系統

AMO的品牌名稱來自"Advanced, Modern,Optimised"的縮寫，
代表著先進、現代且優化的照明系統。

Life with AMO

讓 AMO 走入生活

6:30 AM

In the morning, the timer-set AMO Smart Lighting System set-up to Morning Mode" this mode activates the curtains/lights to be open automatically., the curtains open slowly, and the lights convert to white, gently waking you up with the warmth of daylight and creating a pleasant start to a beautiful day.

一天的早晨，定時設定的早安模式自動開啟，窗簾緩緩地打開，燈光開啟至白光，用溫暖的日光及燈光輕輕地喚醒，迎接美好的一天。

15:30 PM

I had an important meeting in the afternoon, and when I pressed the conference mode switch, the lights in the office automatically dimmed and the curtains closed. It escalate the focus of the content and facilitate easy preparation for the meeting.

下午有個重要的會議，按下會議模式開關，辦公室的燈光自動調暗，並且闔上了窗簾，讓人輕鬆準備會議，更容易專注在內容上。

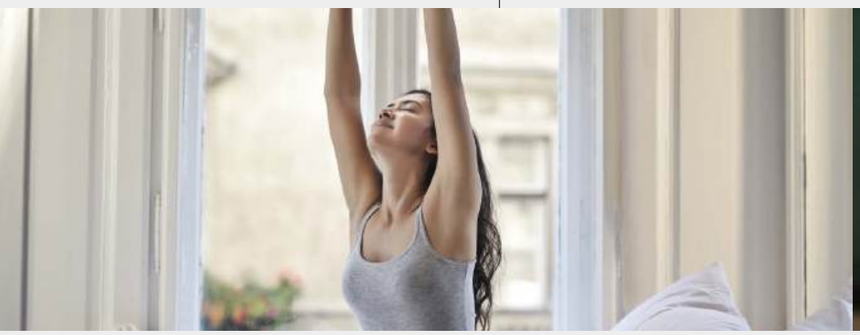

10:00 AM

When you enter the office to start preparing for the day's work, the work mode is automatically activated and the office lights are switch to full white light, high color temperature and high illumination which helps suppress melatonin and maintain efficient work performance.

進到辦公室開始準備一天的工作，自動開啟工作模式，辦公室的燈光切換至白光全亮，高色溫及高照度抑制褪黑激素，保持高效率的工作效能。

AMO Smart Lighting System brings great convenience and comfort to our lives through a variety of scene mode settings. Starting with a warm wake-up call in the morning, to productive working environment, to preparing for a meeting in the afternoon, AMO Smart Lighting System adjusts not only the brightness and color temperature of the light, but also provides focus and comfort in the environment. When we get home, it's easy to enjoy an immersive audio-visual experience, and when we're getting ready for bed, AMO Smart Lighting System helps us drift into a state of relaxation and ultimately fall asleep with ease. AMO Smart Lighting System makes life easier, more comfortable, and better suited to our daily rhythms and needs.

AMO 智能照明系統透過多種場景模式的設定使我們的生活帶來了極大的便利和舒適性。從早晨的溫暖喚醒，到辦公室的高效工作，再到下午的會議準備，AMO 智能照明系統不僅調整了燈光亮度和色溫，還提供了環境的專注和舒適性。回到家後，可以輕鬆享受沈浸式的影音體驗，而在準備睡眠時，AMO 智能照明系統也能幫助我們逐漸進入放鬆的狀態，最終輕鬆入睡。透過 AMO 智能照明系統使生活變得更加便捷、舒適，並且更好地配合了我們的日常節奏和需求。

22:00 PM

After watching the movie, they slowly move to the bedroom and turn on therest mode, bringing the lights in the room to turn into soft yellow glow., the light in the room turns to a soft yellow glow, and simply tidy up the room to prepare for tomorrow's work.

看完電影後，緩緩地移動到臥房，開啟休息模式，房內燈光轉為柔和的黃色光線，簡單的整理房間，為明天的工作做準備。

20:00 PM

In the evening, after dinner and a short break, the family sits on the living room sofa and prepares to watch a movie. Simply say "Hey AMO" to the AMO voice assistant, and the lights are slowly adjusted to a low color temperature and low brightness, providing an immersive audio-visual lighting effect.

傍晚回到家吃完晚飯稍作休息後，一家人坐在客廳沙發準備觀賞電影，只要對小莫語音助理說：嘿 小莫，劇院模式，燈光緩緩調整成低色溫低亮度，提供沈浸式影音照明效果。

24:00 AM

As sleepiness gradually sets in,, the regular sleep mode is turned on, some of the lights in the room are turned off, while the remaining lights are switched to the lowest color temperature and low illumination. Finally, when it is time to sleep, they ask AMO voice assistant to turn off the lights without needing to do it manually.

睡意漸漸襲來，平日固定定時的睡眠模式開啟，房間內部分燈光關閉，其餘燈光缺換至最低色溫、低照度，最後到了睡覺時間，語音請小莫助理關燈，無須手動開關。

Healthy Lighting

健康照明

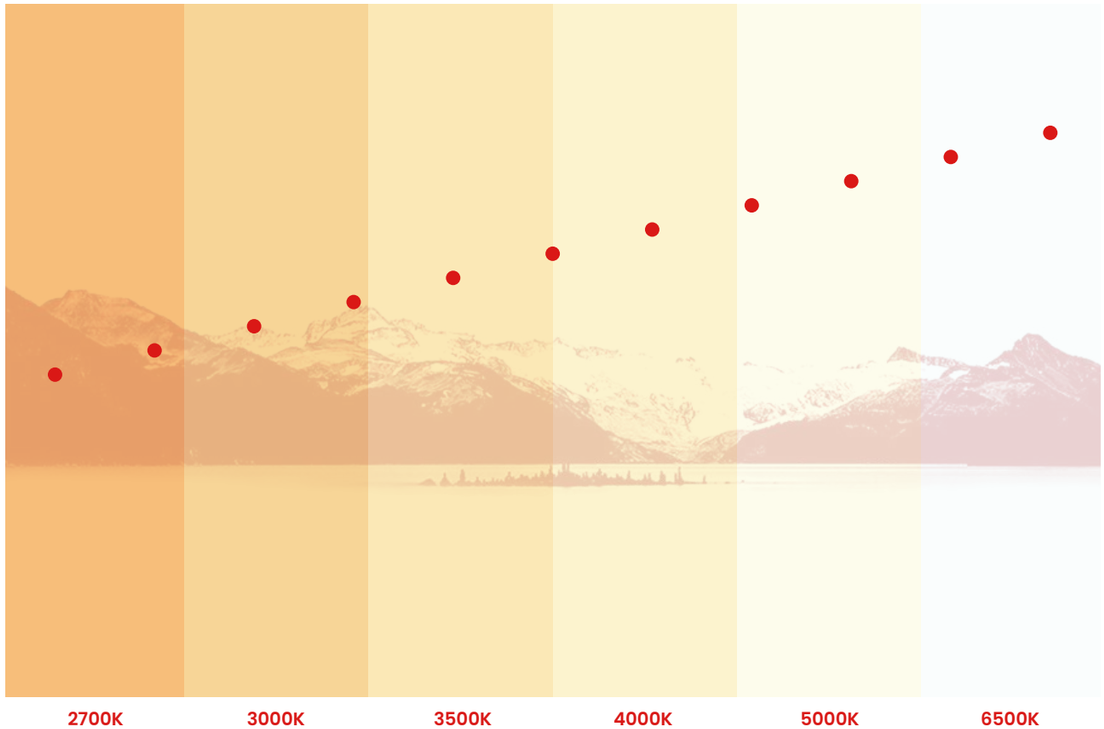

The light environment (color temperature and illumination) can affect the human body's rhythm of rest and relaxation. Lighting with different color temperatures can regulate the physiological state of the body during daytime and nighttime. Using higher color temperature lighting in the morning suppresses the secretion of melatonin, which helps to maintain vitality and increase productivity, while using lower color temperature lighting in the evening promotes the secretion of melatonin, which helps to relax and fall asleep. With AMO Smart Lighting System, in addition to adjusting the light environment, rhythmic lighting can also be activated using the smart control settings, so that the indoor light environment meets the needs of the human body and helps to regulate the physiological clock under different occasions and needs, which has a positive impact on health.

光環境 (色溫及照度) 可以影響人體的作息節律，藉由不同色溫的照明可以調節白天和夜晚的生理狀態。在早上使用較高色溫的照明，可以抑制退黑激素分泌，有助於保持活力及提高生產力，反之，在晚上使用較低色溫的照明促進褪黑激素分泌有助於放鬆和入睡。

透過 AMO 智能照明系統，除了調整光環境之外，也可以利用智能控制設定啟用節律照明，在不同的場合及需求下，讓室內的光環境符合人體需求並有助於調節生理時鐘，對健康帶來正面的影響。

The light environment is a major regulator of the physiological clock, and the color temperature of the lighting is one of the key factors affecting the light environment. We summarize the relationship between color temperature and scene as follows Warm light (low color temperature): between 2700K and 3300K, showing warm yellow tones. This type of lighting usually gives people a warm, comfortable feeling, and is suitable for rest and relaxation environments such as bedrooms or guest areas; or scenes that require relaxation such as theater mode or party mode. Neutral light: The color temperature is between 3500K and 4500K, with a whiter tone. This color temperature lighting is suitable for offices, kitchens, and other places that require visual clarity or long stay mode, such as reading mode. White light (high color temperature): Usually above 5000K, with a white tint. This type of lighting improves concentration and productivity and is suitable for meeting rooms, exhibition spaces or other scenes that require a high degree of concentration, such as conference mode. Therefore, intelligent control becomes the most critical jigsaw puzzle of healthy lighting. With AMO Smart Lighting System, you can change the light environment according to your needs to achieve physical and mental balance.

光環境是生理時鐘的一個主要調節因素，而照明的色溫是影響光環境的關鍵因素之一。我們對於色溫跟場景的關係概略如下

暖光（低色溫）：介於 2700K 到 3300K 之間，呈現暖黃色調。這樣的照明通常給人一種溫暖、舒適的感覺，適合用於休息和放鬆的環境，如臥室或會客區 ; 或是需要放鬆的場景如劇院模式、聚會模式。

中性光：色溫約在 3500K 到 4500K 之間，呈現較白色調。這種色溫的照明適合用於辦公室、廚房等需要視覺清晰的地方或是長時間久待的模式，如閱讀模式。
白光（高色溫）：通常在 5000K 以上，呈現白色調。這種照明能夠提高注意力和生產力，適合用於會議室、展示空間或需要其他高度專注的場景如會議模式。

因此，智能控制成為健康照明最關鍵的拼圖，有了 AMO 智能照明系統，即能隨心所欲的依據需求變換光環境，達到身心平衡。

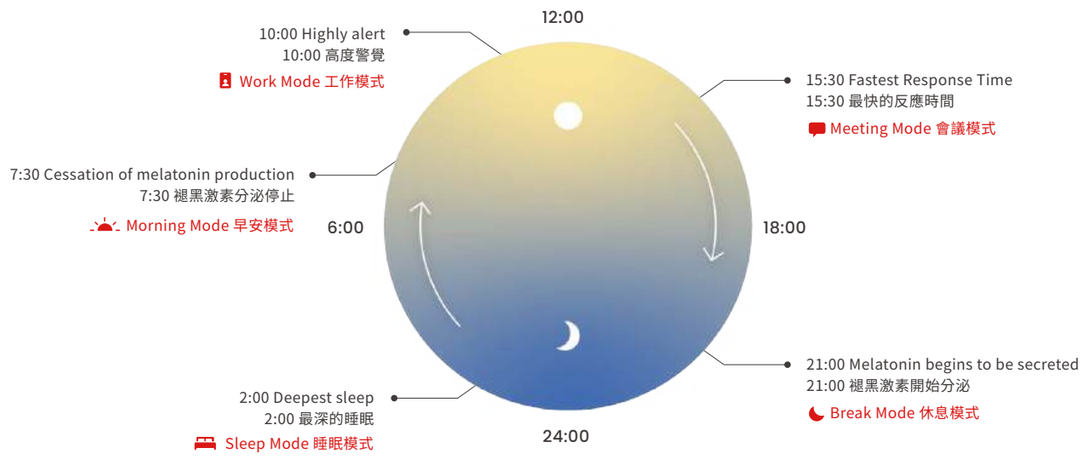

Healthy lighting has become an important element of modern quality of life, not only about the visual effect, but also the pursuit of comprehensive care for the body and mind. Through a careful lighting design, we can establish a physiological clock, improve visual comfort and promote psychological stability of the light environment. Better lighting control helps improve efficiency and reduce stress in the workplace, making it a key to health and comfort. Proper lighting improves visual comfort in the workplace and reduces eye fatigue. When people experience a comfortable light environment, it is easier to stay focused, reducing distractions. Good lighting design reduces glare and shadows, and provides an even, steady stream of light to help minimize eye discomfort. This is important for people who work long hours, choosing a high color temperature lighting environment can help increase efficiency and productivity.

健康照明已成現代生活品質的重要元素，不僅關照視覺效果，更追求對身心的全面照護。透過精心的照明設計，我們能建立生理時鐘、提高視覺舒適度、促進心理穩定的光環境。這不僅提升個人生活品質，同時在工作場所中也有助於提高效率、降低壓力，成為健康與舒適的關鍵。
適當的照明能夠提高工作環境的視覺舒適度，減少眼睛的疲勞感。當人們感受到舒適的光環境時，他們更容易保持專注，減少分心和注意力不集中的情況。

良好的照明設計能夠減少眩光和陰影，提供均勻、穩定的光線，有助於減少眼睛的不適感。這對於長時間工作的人們尤其重要，同時選擇高色溫光環境有助於提高工作效率和生產力。

1 Conference rooms 會議室

2 Office 辦公空間

1 AMO Smart Lighting System can be used in conference rooms to switch between conference mode and projection mode. The change of lighting color temperature and illuminance is used to effectively improve work efficiency and productivity.

2 Different scenes can be switched according to different time periods such as: work mode, lunch mode, rest mode, etc. Healthy lighting can improve the work efficiency and productivity of employees, making it easier for them to focus on their work tasks and get enough rest at the right time.

1 會議室使用 AMO 智能照明系統可切換會議模式、投影模式等。用照明色溫及照度的改變來有效提升工作效率，提高產能。

2 根據不同時段可切換不同場景如：工作模式、午餐模式、休息模式等。健康照明能夠提高員工的工作效能與生產力，使員工更容易集中注意力於工作任務並在適當的時間獲得充分休息。

Advantages

AMO 智能照明系統優勢

Bluetooth connection
快速藍牙連線

Bluetooth enables fast connectivity and control of the device even in Airplane mode.
藍牙能快速連線，且在飛航模式下也能控制設備。

Multiple control methods
多重控制方式

Supporting voice control, remote control, table control and wall control, you can enjoy the convenience of smart lighting.
支援語音控制、遙控器、桌控和壁控，讓您享受智慧照明的便利。

Cable-free construction
免拉線施工

The lighting is set up without pulling wires, preventing the need to damage the original decoration.
燈具設置免拉線，不需破壞原有裝潢。

Whole-house lighting control
全室燈具連線控制

In addition to basic lighting, decorative lights can also be easily connected to our system.
除了基礎照明外，裝飾燈也可以輕鬆與我們的系統連接。

Download on the App Store

AMO Smartlighting

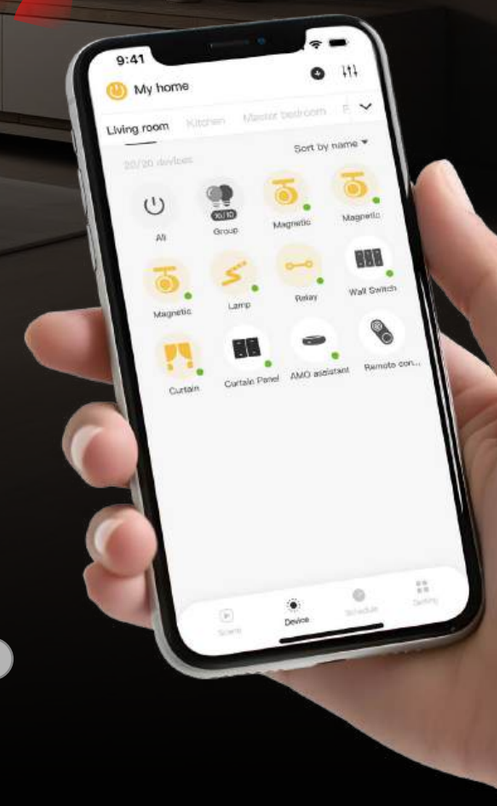

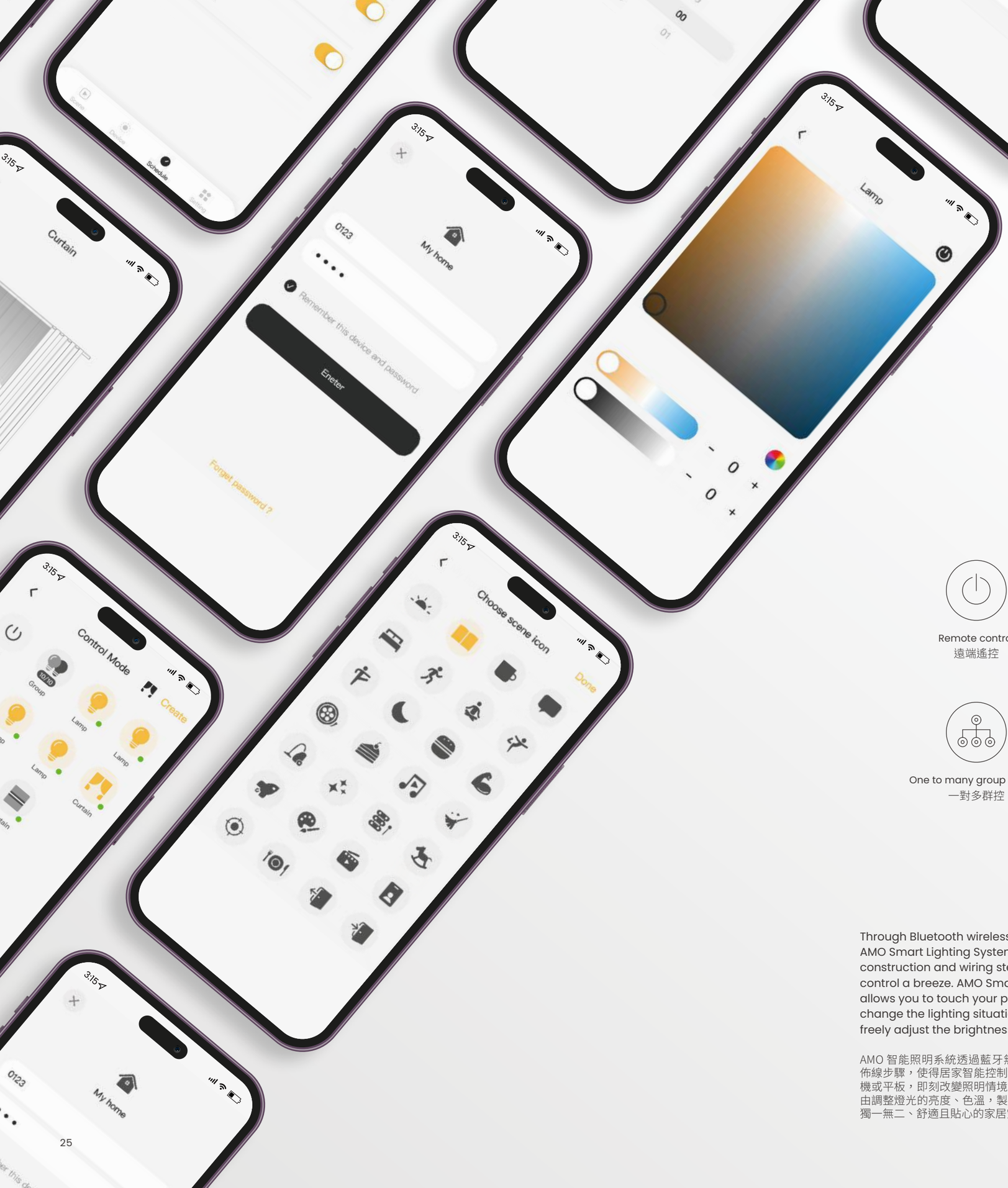

Features

AMO 智能照明系統特點

Remote control
遠端遙控

Brightness adjustment
亮度調整

Color temperature control
色溫調控

Curtain control
窗簾控制

One to many group control
一對多群控

Scene control
場景控制

Circadium lighting
節律定時

Voice control
語音控制

Through Bluetooth wireless communication technology, AMO Smart Lighting System eliminates complicated construction and wiring steps, making intelligent home control a breeze. AMO Smart Lighting System not only allows you to touch your phone or tablet to instantly change the lighting situation, but also allows you to freely adjust the brightness and color temperature of the lights according to your preferences and needs, creating different scenes and atmospheres, creating a unique, comfortable and intimate home space for you. Whether you are looking for a cozy family time, an exciting entertainment atmosphere, or a quiet reading environment, you can switch in an instant to meet your changing needs.

AMO 智能照明系統透過藍牙無線通訊技術，免去了繁複的施工和佈線步驟，使得居家智能控制變得輕而易舉。不僅讓您可以輕觸手機或平板，即刻改變照明情境，更能夠根據您的喜好和需求等，自由調整燈光的亮度、色溫，製造出不同場景和氛圍，為您打造一個獨一無二、舒適且貼心的家居空間。

無論是追求溫馨的家庭時光、興奮的娛樂氛圍，或是寧靜的閱讀環境，都能在瞬間切換，滿足您多變的生活需求。

Premium Tuning Car fine leather Smart Wall Switch

頂級改裝車訂製皮革智能壁控

BRABUS is a world-renowned premium tuning car company known for its high-performance and luxury modifications to Mercedes-Benz. Since its inception in 1977, BRABUS has been renowned for its superior tuning techniques, exquisite craftsmanship and extreme attention to detail.

BRABUS tuning not only enhances the performance of the vehicle, but also focuses on the luxury upgrading of the interior. It offers the finest leathers and materials with a high degree of customisation options, making each tuned vehicle a symbol of the driver's identity and taste. These bespoke models offer unrivalled luxury and refinement in performance, exterior and interior, making them the personalised first choice in high-performance supercars.

CUBEE.IS has been Brabus' exclusive distributor for 10 years and has been honoured as the best distributor in the world almost every year for its deep understanding of the brand and excellent service.

BRABUS 是一家享譽全球的高級汽車改裝公司，以對 Mercedes-Benz 進行高性能和豪華改裝而聞名。自 1977 年成立以來，BRABUS 一直以卓越的改裝技術、精湛的手工藝和對細節的極致追求而聞名。

BRABUS 的改裝不僅提升了車輛性能，更加注重內裝的奢華升級。它提供最優質的皮革和材料，並提供高度的訂製化選擇，使每一輛改裝車都成為駕駛者身份和品味的象徵。這些訂製車款在性能、外觀和內飾上都展現出無與倫比的奢華與精緻，是高性能超級跑車中個性化的首選。

三一東林成為 BRABUS 的總經銷商的 10 年以來，憑藉對品牌的深刻理解和卓越的服務，CUBEE.IS 幾乎年年獲得了全球最佳代理商的榮譽。

9123 Black 時尚黑	9134 Granite 花崗礫	9173 Taupe 煙燻灰	9162 Light grey 冰川灰	9163 Pearl 珍珠白	9111 Cognac 干邑棕
9114 Raspberry 莓果紅	9177 Orange 琥珀橙	9188 Yellow 艷陽黃	9119 Bottle green 青花綠	9185 Sky 天際藍	9121 Dove blue 晨霧藍

Cubee Lighting, leveraging the high-end tuning car sales background of the HEP Group and as the global best dealer of BRABUS through CUBEE.IS , has always sought to find elements that resonate deeply when developing the AMO smart lighting system accessories. By merging the aesthetics of automotive design with lighting, we ultimately chose the same quality lychee-pattern leather used in BRABUS custom vehicles, a long-term partner of CUBEE.IS. This leather represents the pinnacle of craftsmanship and aesthetics, embodying our commitment to and pursuit of refined living. It offers a warm texture and touch, with each piece meticulously selected and hand-processed to reveal unique patterns and fine details. It symbolizes our relentless pursuit of perfection and our promise to provide users with the best product experience.
This leather was once part of a luxurious car interior, witnessing countless moments of joy and awe from drivers and passengers. When we apply this leather, specially treated, to cover the AMO smart wall switch, it becomes more than just decoration or device; it introduces a new tactile experience. Each touch reveals the delicate warmth of premium automotive leather, conveying our care and consideration for every user. This tactile sensation is not just physical contact but also a resonance with the soul. Our premium custom car leather smart wall switch is more than a smart device; it is a work of art capable of evoking emotions and connections. Let's experience this warmth and beauty together, making life richer in quality and more touching."

三一照明科技因著三一東林集團的高級訂製車銷售背景，同時也因 CUBEE.IS 長年為 BRABUS 全球最佳超級汽車代理商，因此，在開發 AMO 智能照明系統配件時，我們不斷尋找能夠觸動人心的元素，並將汽車與照明美學融合，最後選擇與 CUBEE.IS 長期合作夥伴 - BRABUS 同規格高級訂製車的荔枝紋皮革；因為它代表了一種極致的工藝和美學以及我們對生活品味的堅持與追求。它有著溫暖的質感和觸感。每一塊皮革都經過精心挑選和手工處理，呈現出獨特的紋理和細膩的質地。它象徵著我們對完美的不懈追求，也體現了我們希望為使用者帶來最好的產品體驗的承諾。
這些皮革曾經是奢華汽車內飾的一部分，見證了無數次駕駛者與乘客的快樂與驚嘆。當我們將這樣一塊皮革經過特殊加工包覆在 AMO 智能壁控的控制面板上時，它不僅僅是一個裝飾，同時帶來了一種全新的觸覺體驗。每一次觸摸感受到的是來自奢華汽車的頂級皮革的細膩和溫暖，感受到的是我們對每一位使用者的用心和關懷。這樣的觸感，不僅僅是物理上的接觸，更是心靈的共鳴。

我們的頂級改裝車訂製皮革智能壁控，不僅僅是一個智能裝置，更是一個能夠喚起情感和共鳴的藝術品。讓我們一起，感受這份溫暖與美好，讓生活變得更加有質感，更加動人。

Comparison

AMO 智能照明系統與他牌比較

AMO		Brand 1	Brand 2
Bluetooth 5.0	Control Protocol	DALI DT8	Z-Wave
✔ Single Lighting Control ✔ Multi-select control ✔ Group Control ✔ Loop Control ✔ Context Switching	Lighting Control	✔ Single Lighting Control ✔ Multi-select control ✔ Group Control ✔ Loop Control ✔ Context Switching	✘ Single Lighting Control ✘ Multi-select control ✔ Group Control ✔ Loop Control ✔ Context Switching
Wireless	Connectivity	Wired	Wired
User-friendly	APP Setting	Complicated	Complicated
None	Host	Must	Must
Foundation Lighting : Dimming / Tunable LED Strip : Dimming / Tunable / RGBCW Decorative Lighting : On /Off / Dimming Curtain : Yes Voice Assistant : AMO Assistant	Lighting Function	Foundation Lighting : Dimming / Tunable LED Strip : Dimming / Tunable / RGB Decorative Lighting : On/Off/Tunable Curtain : Yes Voice Assistant : Apple/Google/Amazon	Foundation Lighting : Dimming LED Strip : Dimming / Tunable / RGBW Decorative Lighting : On/Off Curtain : Yes Voice Assistant : Apple
Three years	Guarantee	two years	one year
NT$ 2,100 - 3,000 / m^2 (System with fixtures)	Area 99.1 m^2 (IncludingService)	NT$ 9,000 - 12,000 / m^2 (System with fixtures)	NT$ 3,800 - 5,000 / m^2 (System with fixtures)

AMO		他牌一	他牌二
藍牙 5.0	控制協定	DALI DT8	Z-Wave
✔ 單燈調控 ✔ 多選調控 ✔ 群組調控 ✔ 迴路控制 ✔ 情境切換	燈光調控	✔ 單燈調控 ✔ 多選調控 ✔ 群組調控 ✔ 迴路控制 ✔ 情境切換	✘ 單燈調控 ✘ 多選調控 ✔ 群組調控 ✔ 迴路控制 ✔ 情境切換
無線 傳統迴路	佈線	有線 特定迴路	有線 特定迴路
簡單	APP 設定	難	難
無	主機	有	有
基礎燈具：調光 / 調色 燈條：調光 / 調色 /RGBCW 裝飾燈：開關 / 調光 窗簾：有 語音助理：小莫助理	燈光功能	基礎燈具：調光 / 調色 燈條：調光 / 調色 /RGB 裝飾燈：開關 / 調光 窗簾：有 語音：Apple/Google/Amazon	基礎燈具：調光 燈條：調光 / 調色 /RGBW 裝飾燈：開關 窗簾：有 語音：Apple
三年	保固	二年	一年
7000 - 10000 / 坪 (系統含燈具)	30 坪 (服務估價)	30000 - 40000 / 坪 (系統含燈具)	13000 - 17000 / 坪 (系統含燈具)

Highly compatible systems

高度兼容的生態系統

Sunlight Mode 日光模式 *Read Mode 閱讀模式* *Leisure Mode 休閒模式* *Theater Mode 劇院模式*

AMO Smart Lighting System bring a smart experience to your home by adjusting the lighting according to the time of day to create the most suitable ambience. Unique dimming and color temperature functions provide personalized lighting to enhance living quality.

AMO 智能照明系統為居家帶來智慧體驗，可根據時段調整照明，打造最適合的氛圍。獨特的調光和色溫功能提供個性化照明提升居住品質。可適應不同時刻，提供多樣化照明設置，透過智能控制系統，輕鬆享受美好時光。讓 AMO 智能照明系統的柔和光影，成為家中溫馨的註解。

Adapting to different times of the day, AMO Smart Lighting System provides a wide range of lighting settings, making it easy to enjoy good times through the intelligent control system. Let the soft light of AMO Smart Lighting System become a warm and cozy note in your home.

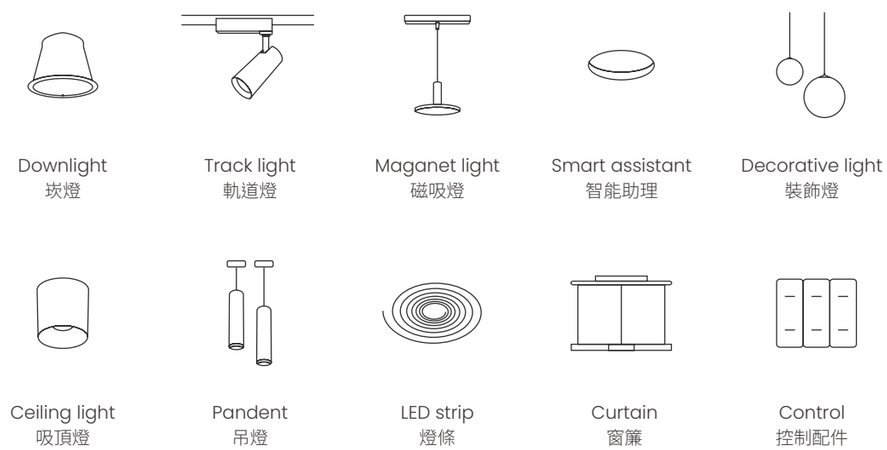

What makes the AMO Smart Lighting System unique is its excellent compatibility, which allows even fixtures not manufactured by us to be seamlessly integrated into our system. This feature not only expands your options, but also provides you with great convenience. With AMO Smart Lighting System , you can easily manage and control fixtures from different brands and models without worrying about compatibility issues. This means you are no longer limited to a specific brand or model, but can incorporate your favorite fixtures to create a lighting environment that truly fits your personal style and needs. This high degree of customizability is one of the highlights of AMO Smart Lighting System , bringing you more possibilities and a wider range of choices.

AMO 智能照明系統獨特之處在於其卓越的兼容性，即使是非本公司生產的燈具，也能無縫整合進我們的系統中。這一特點不僅拓展了您的選擇空間，更為您提供了極大的便利性。

透過 AMO 智能照明系統，您可以輕鬆地管理、控制來自不同品牌和型號的燈具，不需擔心相容性問題。這意味著您不再受限於特定品牌或型號，而是能夠融合您喜好的各種燈具，打造一個真正符合個人風格和需求的照明環境。這種高度的可定制性，正是 AMO 智能照明系統的一大亮點，為您帶來更多可能性和更廣泛的選擇權。

AMO Smart Lighting System can adjust the lighting scene according to different time periods and uses, thus creating the most suitable lighting atmosphere. The dimming and color temperature adjustment functions of the smart fixtures provide the most suitable lighting effects for different occasions, and the personalized lighting settings help to enhance the guests' living experience. From energetic lunches to relaxing dinners, AMO Smart Lighting System can provide a wide range of lighting settings, making restaurant lighting more flexible and versatile. By utilizing the benefits of smart fixtures, restaurants can create a unique sense of place, with different lighting styles for lunch, dinner and late-night snacks, bringing a richer sense of dimension to the restaurant. With AMO Smart Lighting System, restaurant operators can easily control and change the lighting environment. This saves labor costs and ensures optimal lighting for each dining period.

AMO 智能照明系統可以根據不同時段和用途調整照明場景，從而打造出最適合的照明氛圍。 智能燈具的調光和色溫調節功能可根據不同的場合提供最適合的照明效果，個性化的照明設置有助於提升客人生活體驗。

從充滿活力的午餐到放鬆的晚餐時段，AMO 智能照明系統可提供多樣化的照明設置，使餐廳照明更彈性和多變性。利用智能燈具的優點，餐廳可以打造出獨特的區域感，例如午餐、晚餐及宵夜時段可以擁有不同的照明風格，為餐廳帶來更豐富的層次感。

透過簡單易上手的 AMO 智能照明系統，餐廳經營者可以輕鬆地控制和改變照明環境。節省人力成本，同時確保每個用餐時段都能擁有最佳的照明效果。

Dinner Mode 一般用餐模式

Date Mode 夜間約會模式

Restaurant 用餐空間

Commercial Space 商用空間

Hotel 精品旅館

Aromatherapy Center 芳療會館

1 AMO Smart Lighting System can combine decorative fixtures to create a consistent lighting space aesthetic experience, allowing guests to enjoy an honored space and enhance consumer satisfaction.

2 We provide professional asymmetric fixtures to showcase the facade of a space and change the look and feel of the space with the seasons. In winter, warm light creates a sense of warmth and comfort in the room; in summer, cool light creates a cool atmosphere, and the lighting subtly enhances the attractiveness of the merchandise and increases sales opportunities.

3 AMO Smart Lighting System's sophisticated smart panel allows you to switch between Welcome Mode, Theater Mode, Reading Mode, and Night Mode at the touch of a button, creating a unique environment in which you can enjoy a home-like experience.

4 The gentle indirect lighting creates a cozy environment, and the smooth dimming function can be used in conjunction with aromatherapy courses, switching the welcome mode, dressing mode, aromatherapy mode and relaxation mode according to different treatment sessions, creating a relaxing atmosphere and enhancing customer satisfaction.

1 AMO 智能照明系統可結合裝飾燈具，打造一致性的照明空間美學體驗，讓到訪的客人享受尊榮的空間，提升消費滿意度。

2 提供專業的非對稱燈具，展示空間的立面完美呈現，隨季節變換場景感受。冬季，暖光營造室內溫暖感，舒適；夏季，冷光打造清涼氛圍，照明巧妙提升商品吸引力，增加銷售機會。

3 AMO 智能照明系統精緻的智能面板可一鍵切換歡迎模式、劇院模式、閱讀模式、夜間模式，打造獨一無二的環境，享受賓至如歸的體驗。

4 用溫柔的間接照明打造舒適的環境，順暢的調光功能可搭配芳療課程，依據不同療程時段切換歡迎模式、更衣模式、芳療模式及放鬆模式，營造放鬆的氛圍，提升顧客體驗的滿意度。

Process

服務流程

① Reservation
預約體驗

Schedule an appointment with AMO Smart Lighting agent for the overall requirement.
預約 AMO 智能照明館體驗，初步確認各項照明需求。

② Lighting Planning
燈光規劃

Provide a floor plan of the space and specialists to assist with lighting configuration planning.
提供空間平面圖，專人協助燈光配置規劃。

Design Proposal ③
設計提案

Started lighting design planning after discussing with relevant parties, provided lighting design, budgeting, schedule confirmation and signed the contract.
與相關人士討論過後開始燈光設計規劃，提供燈光設計、編列預算、工期確認並簽訂合約。

④ Construction and Installation
施工與安裝

Confirmation and installation of lighting wiring, product entry time and positioning.
裝潢施工現場燈光佈線、產品進場時間與擺放定位確認與安裝。

⑤ Setup and Training
設定與教學

Upon the product installation, the AMO Smart Lighting System's certified engineers will conduct system setup and testing. That will be followed with operation instruction and short training to the site owners.
產品安裝完畢後，工程師會抵達現場進行系統測試與設定，協同業主進行驗收與操作教學。

⑥ Warranty
售後保固

The new AMO Smart Lighting System owners will enjoy a three-years warranty and a lifetime after-sales service directly after the project handover.
系統移交業主，即刻開始享有產品三年保固，終身售後服務。

Finish 完成

Accessories

Picture 圖片	Model Name 型號	Name 名稱	Color 顏色	Size 尺寸	Note 備註
	7MR1-0102-01	AMO Bluetooth Remote Control AMO 藍牙情境遙控器	■ Black/黑	8.6*8.6*1.7cm	CR2450 battery not included 不含CR2450電池
	7MP1-0102-01 Black/黑 7MP1-0202-01 White/白	AMO Bluetooth Wall Control AMO 藍牙情境壁控	■ Black/黑 □ White/白	8.6*8.6*3.6cm	/
	7MP2-0102-01	AMO Bluetooth Curtain Wall Control AMO 藍牙窗簾壁控	■ Black/黑	8.6*8.6*3.6cm	/
	7MV1-0202-01	AMO Bluetooth Voice Assistant AMO 藍牙語音助理	□ White/白	Ø60mm	/
	7MR2-E102-01	AMO Bluetooth Gear AMO 藍牙智能桌控	■ Silver/銀	6.83*6.83*6.7cm	Lithium Battery Charging with Type-C Cable 鋰電池使用Type-C線充電
	8MFF-R102-01	AMO Bluetooth Relay AMO 藍牙繼電器	□ White/白	14.5*3.5*2.8cm	/
	8MD2-V102-01	AMO Bluetooth Driver AMO 藍牙恆壓驅動	□ White/白	11.4*3.1*2.3cm	/
	8MFN-CT02-01	AMO Bluetooth Curtain Driver AMO 藍牙窗簾驅動	□ White/白	14.5*3.5*2.8cm	/

Product

系列產品

Tobias

Developed in according to hotel's lighting design standards to enhance the overall ambience and comfort of the guest rooms, the fixtures are highly versatile with a dual-module quick-change function. It can be rotated 355 degrees and flexibly adjusted to a 15 degree swing angle to accurately illuminate the desired location. Recommended for commercial space, hotel lighting, home lighting and so on, such as hotel rooms, home living room or bedroom.

Tobias 系列是依據飯店的燈光照明設計在提升整體氛圍和客房舒適度方面所研發的燈具，擁有雙模組快速更換功能，極具多樣性。可旋轉 355 度，並靈活調整至 15 度的搖擺角度，以精準照射所需的重點光源。推薦用於商業空間、酒店照明、居家照明等等，如飯店客房、居家客廳或臥室。

Modular design

Multiple front trims and light modules could be chosen, suitable for hospitality and residential lighting.
雙模組快速更換，多樣化前框選擇，適用於酒店及居家照明

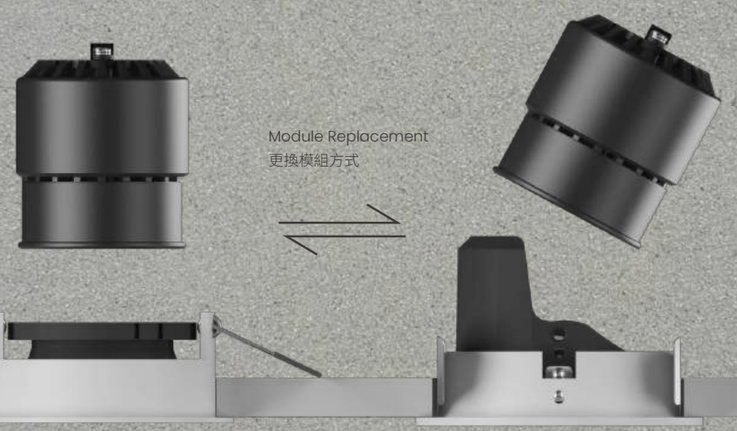

Tobias

ON | OFF · Triac 可控硅 · 0-10V · DALI · AMO Smart Lighting

Picture 圖片	Model Name 型號	Power Factor 整燈功率	Luminous Flux 光通量	BA. 光束角	Beam Type 光束類型	CCT 色溫
	D353 15°	10W	750lm	15°/24°/36°		2700K 4000K 3000K Tunable
	D402 20°	10W	660lm	15°/24°/36°		2700K 4000K 3000K Tunable
	D403 20°	10W	480lm	24°/36°		2700K 4000K 3000K Tunable

White/白 · Black/黑

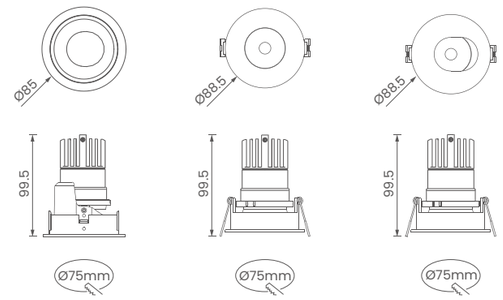

D353 D402 D403

Module 發光模組

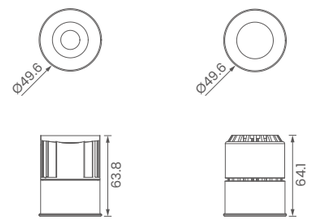

D19X D15X

*Lumen measured of the system (3000K).
*Technical information may change please refer to the datasheet.
*以上流明測量值以3000K為測量數據。
*技術信息可能會發生變化，請參閱規格書。

Unit 單位 | mm 公釐

Narrow Spot 極窄角 : <10° · Spot 窄角 : 11°-20° · Medium Spot 中角 : 21°-30° · Wide 廣角 : 31°-60° · Wide Flood 超廣角 : 61°-80°
Flood 泛光 : >81° · Wallwash 洗牆 · Oval 橢圓角 · Zoomable 調焦角 · Beam Shaper 切光

CRI90 · Dimming · Tunable · 355° · IP20

Ami

Hassle-free Magnetic filters which provides a seamless installation. Adjustable angle of illumination with a click to create stunning lighting effects, providing a versatile and eye-catching solution for a variety of scenes. Stretchable luminaire design allows for flexible switching between base lighting to accent lighting. rotated 355 degrees horizontally and 90 degrees vertically. Recommended for commercial lighting, home lighting, such as store merchandising, home public space.

Ami 系列擁有磁吸式光學濾片、安裝簡便。可輕鬆調整照射角度，打造出令人驚艷的照明效果，為各種場景提供多樣化和引人注目的解決方案。可拉伸的燈具設計，靈活切換基礎照明或重點照明。燈具可旋轉 355 度及搖擺 90 度。建議用於商業照明、居家照明，如門市商品陳列、居家公共空間可變換焦點或是環境照明。

＊ D43X, X is the function code, A is zoom lens, B is magnetic filter + 10° spot, C is magnetic filter + 15° spot.
＊ D43X， X 為功能代號，A 為伸縮鏡頭、B 為磁吸式濾片 + 10° 窄角、C 為磁吸式濾片 + 15° 窄角。

Magnetic filter for changing beam angle and light distribution rapidily.
快速變化光型磁吸濾片

Filter 濾片環

15° Filter 濾片

24° Filter 濾片

38° Filter 濾片

10X35° Filter 濾片

Honeycomb 蜂巢網

Ami

ON | OFF · Triac 可控硅 · 0-10V · DALI · AMO Smart Lighting

Picture 圖片	Model Name 型號	Power Factor 整燈功率	Luminous Flux 光通量	BA. 光束角	Beam Type 光束類型	CCT 色溫
	D44B	10W	440lm	10°		2700K 4000K 3000K
	D43B	10W*3	440lm*3	10°		2700K 4000K 3000K

Accessories 配件

White/白 Black/黑

Magnetic filter 磁吸濾片

15° 24° 38° 10°x35° Honeycomb

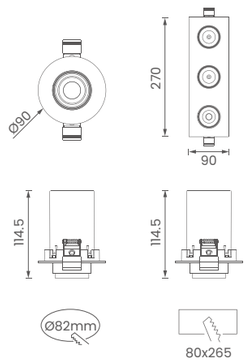

D44B D43B

*Lumen measured of the system (3000K).
*Technical information may change please refer to the datasheet.
*以上流明測量值以3000K為測量數據。
*技術信息可能會發生變化，請參閱規格書。

Unit 單位 | mm 公釐

Narrow Spot 極窄角 : <10° · Spot 窄角 : 11°-20° · Medium Spot 中角 : 21°-30° · Wide 廣角 : 31°-60° · Wide Flood 超廣角 : 61°-80°

Flood 泛光 : >81° · Wallwash 洗牆 · Oval 橢圓角 · Zoomable 調焦角 · Beam Shaper 切光

CRI90 · Dimming · 355° · 90° · IP20

Ami

ON | OFF · Triac 可控硅 · 0-10V · DALI · AMO Smart Lighting

Picture 圖片	Model Name 型號	Power Factor 整燈功率	Luminous Flux 光通量	BA. 光束角	Beam Type 光束類型	CCT 色溫
	D44C	10W	570lm	15°		2700K 4000K 3000K Tunable
	D43C	10W*3	570lm*3	15°		2700K 4000K 3000K Tunable

Accessories 配件

White/白 Black/黑

Magnetic filter 磁吸濾片

15° 24° 38° 10°x35° Honeycomb

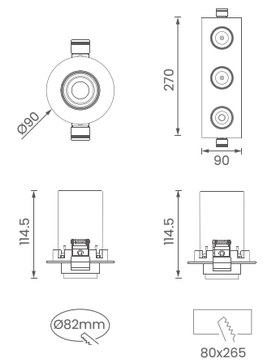

D44C D43C

*Lumen measured of the system (3000K).
*Technical information may change please refer to the datasheet.
*以上流明測量值以3000K為測量數據。
*技術信息可能會發生變化，請參閱規格書。

Unit 單位 | mm 公釐

Narrow Spot 極窄角 : <10° · Spot 窄角 : 11°-20° · Medium Spot 中角 : 21°-30° · Wide 廣角 : 31°-60° · Wide Flood 超廣角 : 61°-80°

Flood 泛光 : >81° · Wallwash 洗牆 · Oval 橢圓角 · Zoomable 調焦角 · Beam Shaper 切光

CRI90 · Dimming · Tunable · 355° · 90° · IP20

Timo

The Timo is a box light series anti-glare nozzle design. Easy to install and easy to maintain. Swivels up to 355 degrees and adjusts flexibly to a 20-degree swing angle for precise illumination of the desired accent light source. Ideal for indoor spaces, usually installed in living room coffee table or entryway welcome light.

Timo 系列盒燈搭配防眩凸嘴設計，安裝簡便且易於維護。可旋轉 355 度，並靈活調整至 20 度的搖擺角度，以精準照射所需的重點光源。適用於室內空間，通常安裝於客廳茶几桌或玄關入口迎賓燈。

Recessed frame
崁入式前框

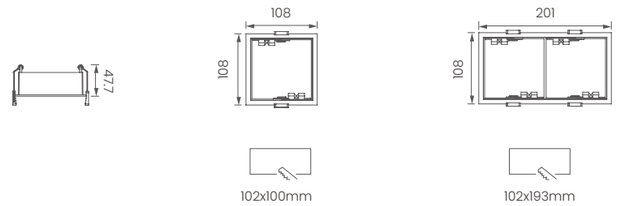

D01H D02H

Trimless recessed frame
崁入式無邊框

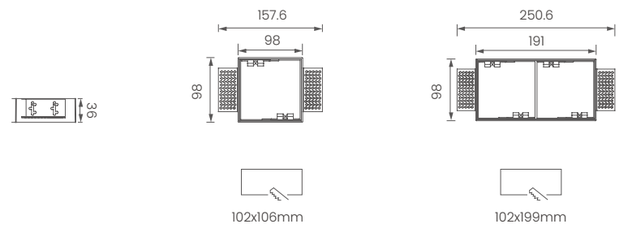

D11H D12H

Installation
安裝方式

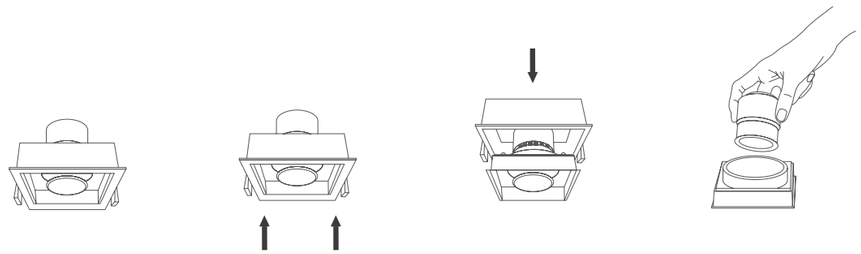

Timo Series
Timo 盒燈

Push the inner box
按壓內盒盒燈

Pop-up module
模組彈出

Take off the module
取下模組

Timo

ON | OFF · Triac 可控硅 · 0-10V · DALI · AMO Smart Lighting

Picture 圖片	Model Name 型號	Power Factor 整燈功率	Luminous Flux 光通量	BA. 光束角	Beam Type 光束類型	CCT 色溫
	D01H	10W	750lm	15°/24°/36°		2700K 4000K 3000K Tunable
	D02H	10W*2	750lm*2	15°/24°/36°		2700K 4000K 3000K Tunable
	D11H	10W	750lm	15°/24°/36°		2700K 4000K 3000K Tunable
	D12H	10W*2	750lm*2	15°/24°/36°		2700K 4000K 3000K Tunable

White/白 · Black/黑

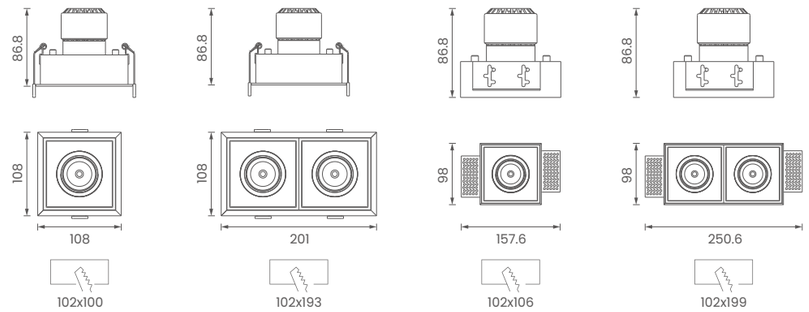

∗Lumen measured of the system (3000K).
∗Technical information may change please refer to the datasheet.
∗以上流明測量值以3000K為測量數據。
∗技術信息可能會發生變化，請參閱規格書。

Unit 單位 | mm 公釐

Narrow Spot 極窄角 : <10° · Spot 窄角 : 11°-20° · Medium Spot 中角 : 21°-30° · Wide 廣角 : 31°-60° · Wide Flood 超廣角 : 61°-80°
Flood 泛光 : >81° · Wallwash 洗牆 · Oval 橢圓角 · Zoomable 調焦角 · Beam Shaper 切光

CRI90 · Dimming · Tunable · 355° · 20° · IP20

D551

Lena

The Lena series offers an unrivaled light environment experience with its compact size and deep anti-glare reflector. The thin bezel design of the lamp body allows the fixture to blend in with the ambiance and design of the venue.

Lena 系列以精緻小巧的尺寸與深防眩反射杯的設計，提供了無與倫比的光環境體驗。細邊框的燈體設計使燈具更能融合現場氣氛與設計。

Lena

ON | OFF · Triac 可控硅 · 0-10V · DALI · AMO Smart Lighting

Picture 圖片	Model Name 型號	Power Factor 整燈功率	Luminous Flux 光通量	BA. 光束角	Beam Type 光束類型	CCT 色溫
	D551	10W	650lm	24°/40°		2700K, 3000K, 4000K, Tunable

White/白 · Black/黑

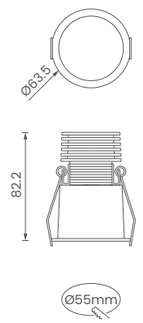

D551

*Lumen measured of the system (3000K).
*Technical information may change please refer to the datasheet.
*以上流明測量值以3000K為測量數據。
*技術信息可能會發生變化，請參閱規格書。

Unit 單位 | mm 公釐

Narrow Spot 極窄角 : <10° · Spot 窄角 : 11°-20° · Medium Spot 中角 : 21°-30° · Wide 廣角 : 31°-60° · Wide Flood 超廣角 : 61°-80°

Flood 泛光 : >81° · Wallwash 洗牆 · Oval 橢圓角 · Zoomable 調焦角 · Beam Shaper 切光

CRI90 · Dimming · Tunable · IP20

Felix

The Felix series features a titanium-colored anti-glare lens and IP54 waterproof design. Ideal for indoor, semi-outdoor, and bathroom spaces, the Felix is an effective barrier against moisture.

Felix 系列具備鍍鈦色防眩透鏡以及 IP54 防水設計。適用於室內空間、半戶外空間以及衛浴空間，能夠有效阻隔濕氣。

Anti-glare black light lens and waterproof design
黑金防眩透鏡及防水設計

Felix

ON | OFF · Triac 可控硅 · 0-10V · DALI · AMO Smart Lighting

Picture 圖片	Model Name 型號	Power Factor 整燈功率	Luminous Flux 光通量	BA. 光束角	Beam Type 光束類型	CCT 色溫
	D36X IP20	10W	510lm	Wallwash 洗牆		2700K 4000K 3000K Tunable
	D361 IP54	10W	750lm	20°/40°		2700K 4000K 3000K Tunable
	D362 IP54	15W	1200lm	20°/40°		2700K 4000K 3000K Tunable
	D363 IP54	25W	1500lm	20°/40°		2700K 4000K 3000K Tunable
	D364 IP54	35W	2200lm	20°/40°		2700K 4000K 3000K Tunable
	D365 IP20	15W	840lm	Wallwash 洗牆		2700K 4000K 3000K Tunable

Installation suggestion 安裝建議

White/白 · Black/黑

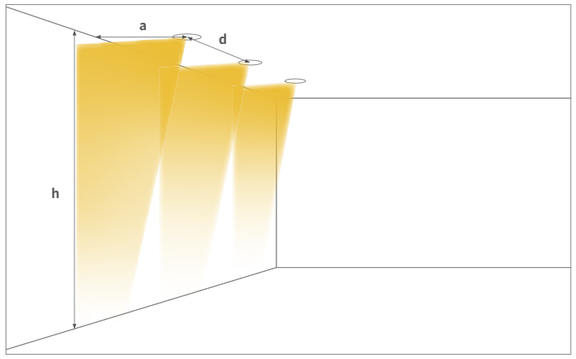

D36X is a 10W product.
The recommended installation distance is about 50cm from the wall, and each lamp is installed at a distance of 40cm.
D36X 為10W產品，建議安裝在距離約在離牆50cm，每盞40cm間距裝一盞
a = 1/4 h , d ≤ 0.8 a

D365 is a 15W product.
The recommended installation distance is about 50cm from the wall, and each lamp is installed at a distance of 50cm.
D365 為15W產品，建議安裝在距離約在離牆50cm，每盞50cm間距裝一盞。
a = 1/4 h , d ≤ 1 a

＊**a** is the distance between the fixture and the wall;
d is the distance between each fixture;
h is the height of the floor.
＊**a**為燈具與牆面距離 ; **d**為每盞燈具間距離 ; **h**為樓板高度。

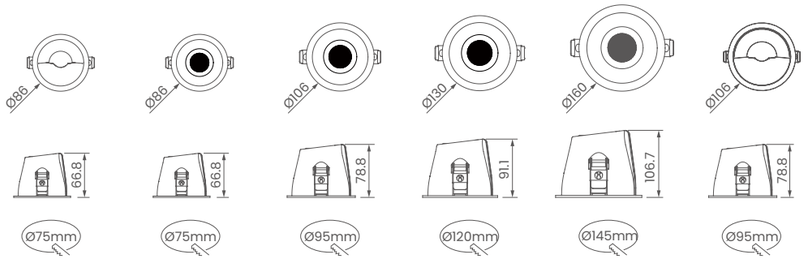

D36X D361 D362 D363 D364 D365

＊Lumen measured of the system (3000K).
＊Technical information may change please refer to the datasheet.
＊以上流明測量值以3000K為測量數據。
＊技術信息可能會發生變化，請參閱規格書。

Unit 單位 | mm 公釐

Narrow Spot 極窄角 : <10° · Spot 窄角 : 11°-20° · Medium Spot 中角 : 21°-30° · Wide 廣角 : 31°-60° · Wide Flood 超廣角 : 61°-80°
Flood 泛光 : >81° · Wallwash 洗牆 · Oval 橢圓角 · Zoomable 調焦角 · Beam Shaper 切光

CRI90 · Dimming · Tunable

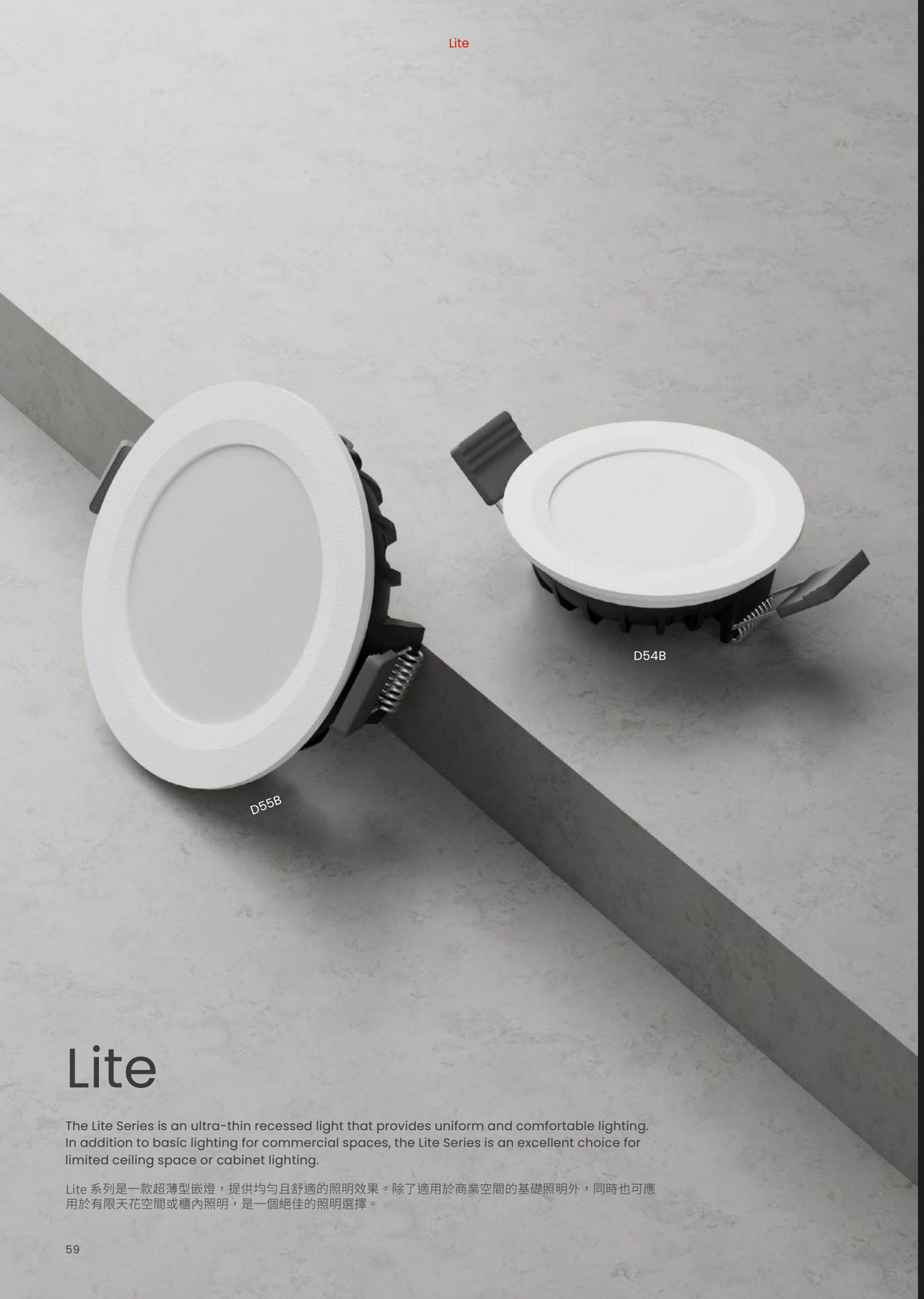

Lite

The Lite Series is an ultra-thin recessed light that provides uniform and comfortable lighting. In addition to basic lighting for commercial spaces, the Lite Series is an excellent choice for limited ceiling space or cabinet lighting.

Lite 系列是一款超薄型嵌燈，提供均勻且舒適的照明效果。除了適用於商業空間的基礎照明外，同時也可應用於有限天花空間或櫃內照明，是一個絕佳的照明選擇。

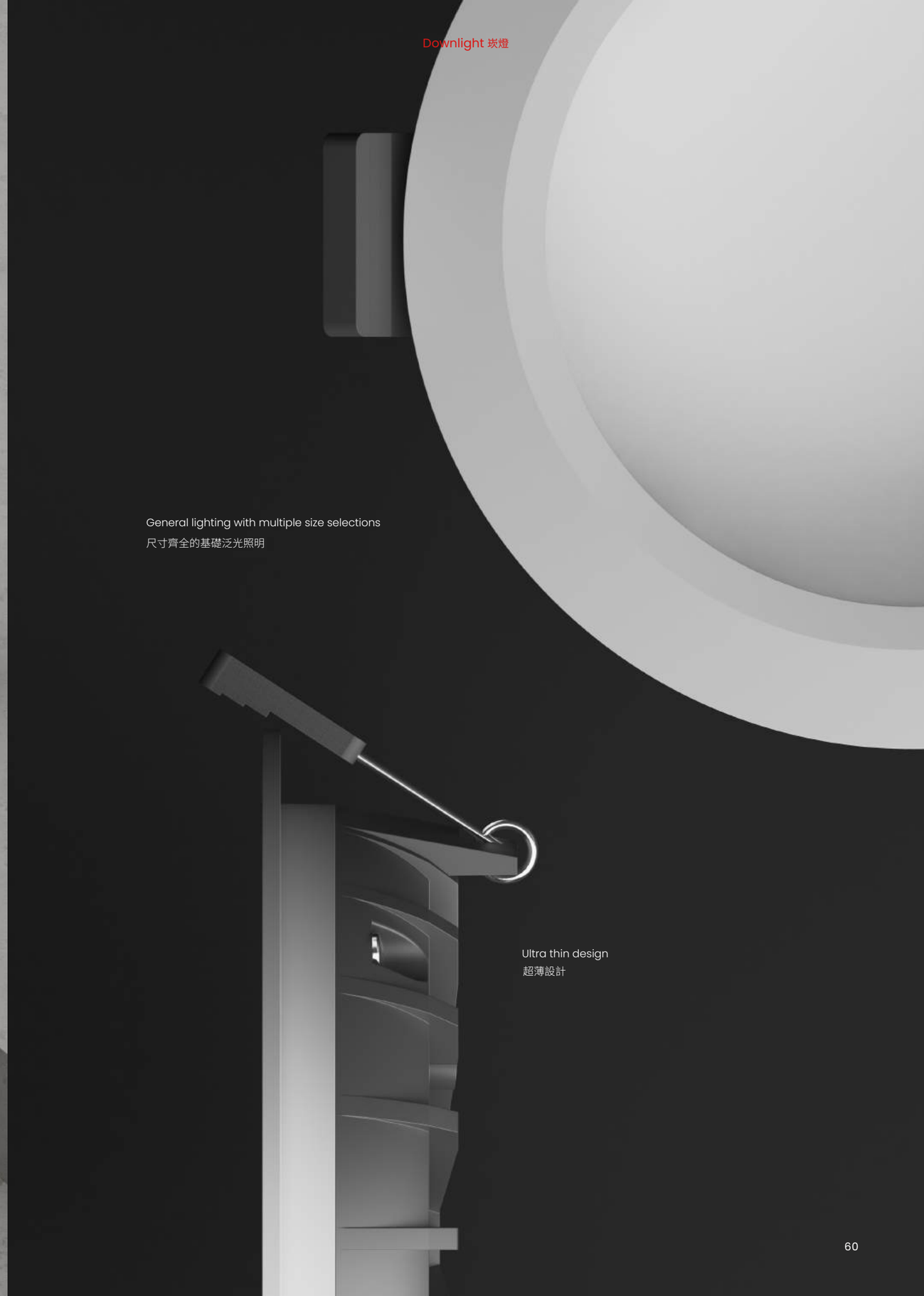

General lighting with multiple size selections
尺寸齊全的基礎泛光照明

Ultra thin design
超薄設計

Lite

ON | OFF · Triac 可控硅 · 0-10V · DALI · AMO Smart Lighting

Picture 圖片	Model Name 型號	Power Factor 整燈功率	Luminous Flux 光通量	BA. 光束角	Beam Type 光束類型	CCT 色溫
	D54B	9W	580lm	Flood 泛光		2700K 4000K 3000K Tunable
	D55B	13W	1000lm	Flood 泛光		2700K 4000K 3000K Tunable

White/白 · Black/黑

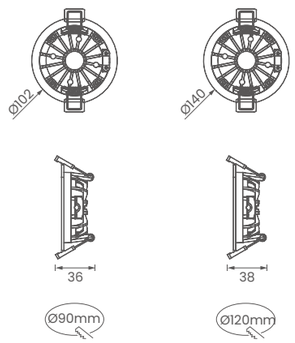

D54B D55B

*Lumen measured of the system (3000K).
*Technical information may change please refer to the datasheet.
*以上流明測量值以3000K為測量數據。
*技術信息可能會發生變化，請參閱規格書。

Unit 單位 | mm 公釐

Narrow Spot 極窄角 : <10° · Spot 窄角 : 11°-20° · Medium Spot 中角 : 21°-30° · Wide 廣角 : 31°-60° · Wide Flood 超廣角 : 61°-80°
Flood 泛光 : >81° · Wallwash 洗牆 · Oval 橢圓角 · Zoomable 調焦角 · Beam Shaper 切光

CRI90 · Dimming · Tunable · IP44

Pascal

Unlike traditional reflector cup designs, the Pascal series features a soft and gentle light effect, offering excellent optical efficiency while maintaining outstanding anti-glare functionality. Ideal for spaces such as hotels and commercial areas like restaurants and retail stores.

Pascal 系列採用了與傳統反射杯設計截然不同的設計，光線效果柔和提供優質的光學出光效率，同時保持出色的防眩光功能。適用空間包括飯店和商用空間，如餐廳和門市。

Pascal

ON | OFF · Triac 可控硅 · 0-10V · DALI · AMO Smart Lighting

Picture 圖片	Model Name 型號	Power Factor 整燈功率	Luminous Flux 光通量	BA. 光束角	Beam Type 光束類型	CCT 色溫
	D315	20W	1250lm	15°/24°/36°		2700K, 3000K, 4000K, Tunable
	D316	30W	1650lm	15°/24°/36°		2700K, 3000K, 4000K, Tunable

White/白 · Black/黑

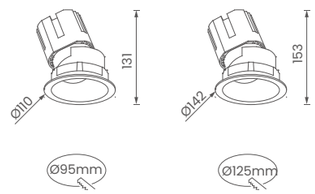

D315 D316

＊Lumen measured of the system (3000K).
＊Technical information may change please refer to the datasheet.
＊以上流明測量值以3000K為測量數據。
＊技術信息可能會發生變化，請參閱規格書。

Unit 單位 | mm 公釐

Narrow Spot 極窄角 : <10° · Spot 窄角 : 11°-20° · Medium Spot 中角 : 21°-30° · Wide 廣角 : 31°-60° · Wide Flood 超廣角 : 61°-80°

Flood 泛光 : >81° · Wallwash 洗牆 · Oval 橢圓角 · Zoomable 調焦角 · Beam Shaper 切光

CRI90 · Dimmable · Tunable · 355° · 30° · IP20

D651 D652

Olga

The Olga series combines high-efficiency optical lighting quality with an excellent anti-glare design, complemented by a special left-right swing design. Recommended for use in commercial spaces and hotel lighting.

Olga 系列結合高效率的光學出光品質與出色的防眩設計，並配備特殊的左右搖擺設計。推薦用於商業空間和酒店照明。

The lamps can be swayed to achieve the maximum illumination angle function.
燈具可搖擺，實現最大照射角度功能

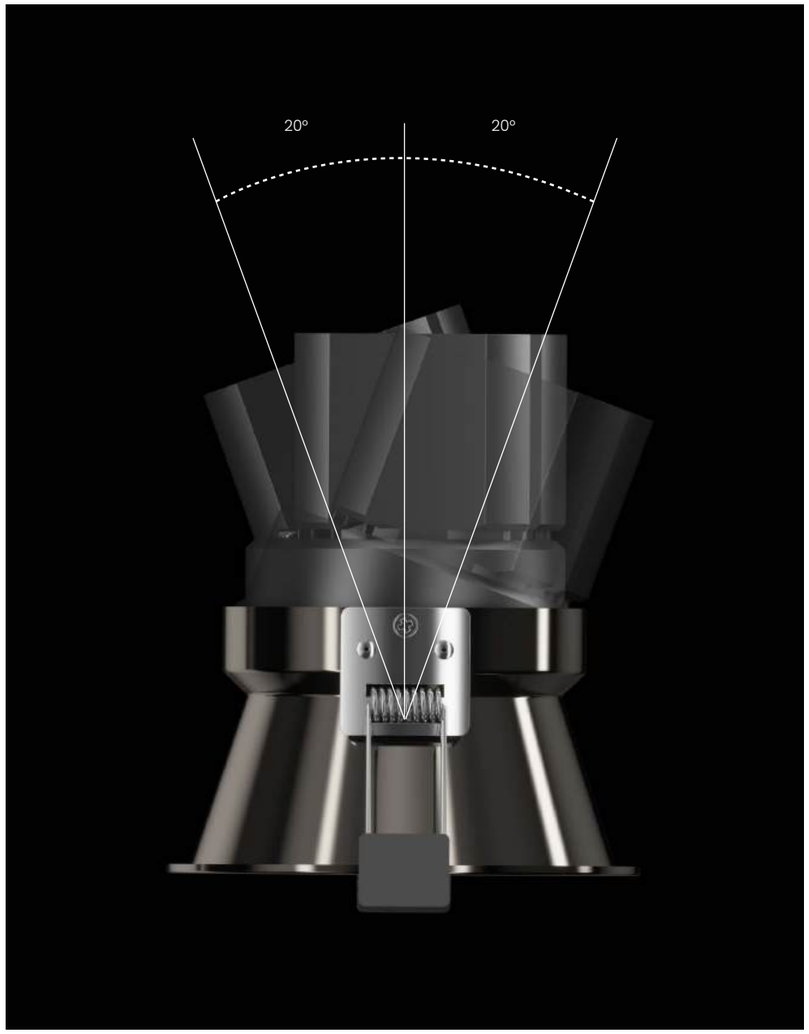

Olga

ON | OFF · Triac 可控硅 · 0-10V · DALI · AMO Smart Lighting

Picture 圖片	Model Name 型號	Power Factor 整燈功率	Luminous Flux 光通量	BA. 光束角	Beam Type 光束類型	CCT 色溫
	D651	24W	1600lm	15°/24°/36°		2700K 4000K 3000K Tunable
	D652	33W	3200lm	15°/24°/36°		2700K 4000K 3000K Tunable

White/白 · Black/黑

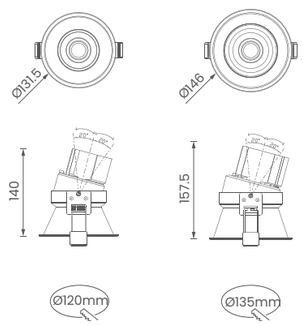

D651 D652

*Lumen measured of the system (3000K).
*Technical information may change please refer to the datasheet.
*以上流明測量值以3000K為測量數據。
*技術信息可能會發生變化，請參閱規格書。

Unit 單位 | mm 公釐

Narrow Spot 極窄角 : <10° · Spot 窄角 : 11°-20° · Medium Spot 中角 : 21°-30° · Wide 廣角 : 31°-60° · Wide Flood 超廣角 : 61°-80°

Flood 泛光 : >81° · Wallwash 洗牆 · Oval 橢圓角 · Zoomable 調焦角 · Beam Shaper 切光

CRI90 · Dimming · Tunable · 20° · IP20

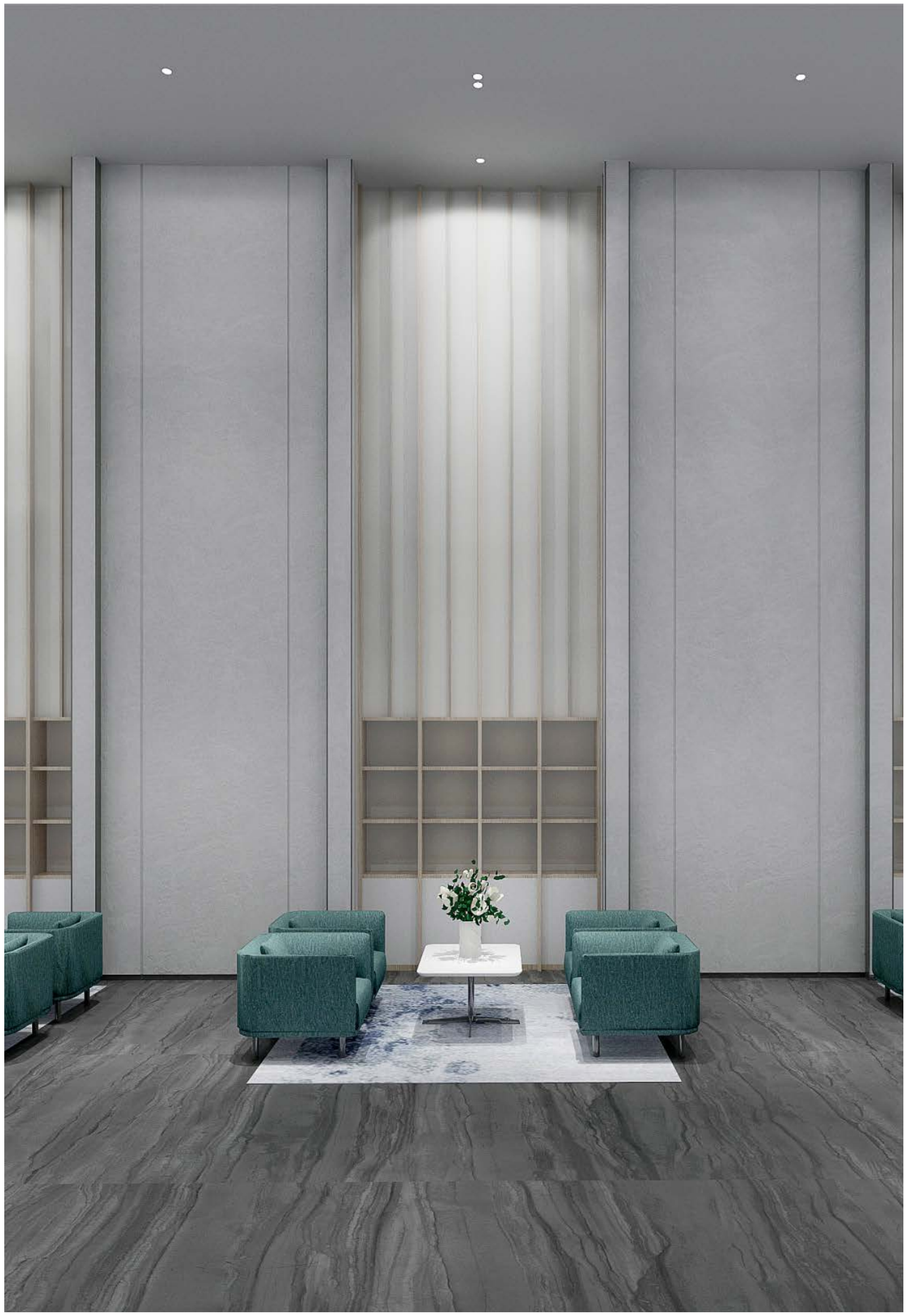

D50X

Lea

Lea series wall washers are different from traditional wall washers due to their special optical design and precision mechanism. It is unique in its ability to illuminate the entire wall from top to bottom, eliminating any shadows and making the light environment more elegant and clean. This superior wallwashing effect is designed for special façade designs.

Lea 系列洗牆燈憑藉其特殊的光學設計和精密的機構設計，與傳統的洗牆燈有所不同。其獨特之處在於，能夠將整個牆面由頂至下均勻照亮，消除任何陰暗處，使光環境更加優雅簡潔。這種卓越的洗牆效果是專為特殊立面設計而生。

Lea

ON | OFF · Triac 可控硅 · 0-10V · DALI · AMO Smart Lighting

Picture 圖片	Model Name 型號	Power Factor 整燈功率	Luminous Flux 光通量	BA. 光束角	Beam Type 光束類型	CCT 色溫
	D50X	15W	1420lm	Wallwash 洗牆		2700K, 3000K, 4000K, Tunable

Installation suggestion 安裝建議

White/白 · Black/黑

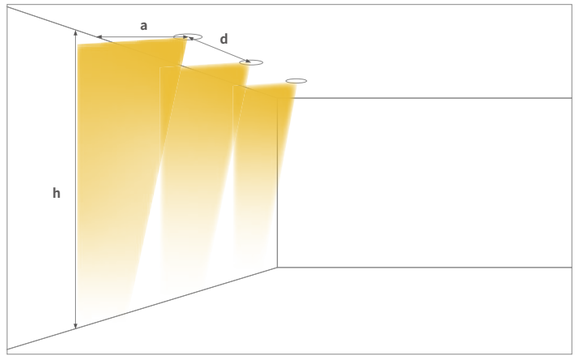

D50X is a 15W product.
The recommended installation distance is about 50cm from the wall, and each lamp is installed at a distance of 60cm.
D50X 為15W產品，建議安裝在距離約在離牆50cm，每盞60cm間距裝一盞。
a = 1/6 h , d ≤ 1.2 a

＊**a** is the distance between the fixture and the wall;
d is the distance between each fixture;
h is the height of the floor.
＊**a**為燈具與牆面距離 ; **d**為每盞燈具間距離 ; **h**為樓板高度。

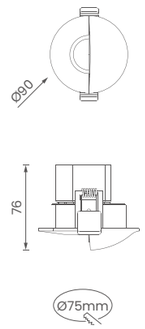

D50X

＊Lumen measured of the system (3000K).
＊Technical information may change please refer to the datasheet.
＊以上流明測量值以3000K為測量數據。
＊技術信息可能會發生變化，請參閱規格書。

Unit 單位 | mm 公釐

Narrow Spot 極窄角 : <10° · Spot 窄角 : 11°-20° · Medium Spot 中角 : 21°-30° · Wide 廣角 : 31°-60° · Wide Flood 超廣角 : 61°-80°
Flood 泛光 : >81° · Wallwash 洗牆 · Oval 橢圓角 · Zoomable 調焦角 · Beam Shaper 切光

CRI90 · Dimming · Tunable · IP20

Ami

The Ami series is a flexible and easy-to-operate, track light that allows you to adjust the angle at any time. The optical system can be paired with accessories to customize the high-quality lighting you need.

The optical filter is easy to install, allowing for effortless adjustment of the lighting angle to create stunning lighting effects and provide diverse and attractive solutions for various scenes. It rotates 355 degrees, swings 90 degrees, and offers three different wattage options to meet customer needs. Suitable for various spatial scenarios.

Ami 系列是一款彈性且操作簡易的軌道燈，讓您可以隨時調整角度。燈具可與配件搭配，客製您所需的高品質照明。

光學濾片簡易安裝，輕鬆更換所需的照射角度，打造令人驚豔的照明效果，為各種場景提供多樣化和吸引人的解決方案。它可旋轉 355 度，搖擺 90 度，並提供三款不同瓦數的選擇，以滿足客戶的需求。適用於各種空間場景。

Ami

ON | OFF · Triac 可控硅 · 0-10V · DALI · AMO Smart Lighting

Picture 圖片	Model Name 型號	Power Factor 整燈功率	Luminous Flux 光通量	BA. 光束角	Beam Type 光束類型	CCT 色溫
	T231	10W	370lm	18°-45°		2700K 4000K 3000K Tunable
	T232	10W	420lm	10°		2700K 4000K 3000K
	T233	10W	570lm	15°		2700K 4000K 3000K Tunable
	T282	15W	800lm	10°		2700K 4000K 3000K Tunable
	T213	35W	2200lm	10°		2700K 4000K 3000K Tunable

White/白 · Black/黑

Accessories 配件

Ø45 Magnetic filter | For models T232, T233
Ø45 磁吸濾片 | 適用於型號 T232, T233

15° 24° 38° 10°x35° Honeycomb

Ø63 Magnetic filter | For models T282
Ø63 磁吸濾片 | 適用於型號 T282

15° 24° 38° 10°x60° 30°x60° Honeycomb

Ø90 Magnetic filter | For models T213
Ø90 磁吸濾片 | 適用於型號 T213

15° 24° 38° 10°x60° 30°x60° Honeycomb

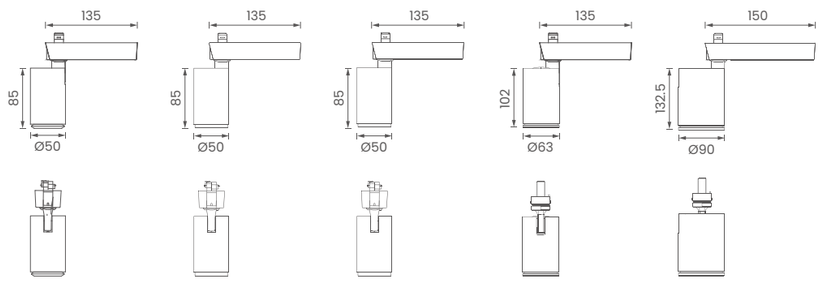

T231 T232 T233 T282 T213

*Lumen measured of the system (3000K).
*Technical information may change please refer to the datasheet.
*以上流明測量值以3000K為測量數據。
*技術信息可能會發生變化，請參閱規格書。

Unit 單位 | mm 公釐

Narrow Spot 極窄角 : <10° · Spot 窄角 : 11°-20° · Medium Spot 中角 : 21°-30° · Wide 廣角 : 31°-60° · Wide Flood 超廣角 : 61°-80°
Flood 泛光 : >81° · Wallwash 洗牆 · Oval 橢圓角 · Zoomable 調焦角 · Beam Shaper 切光

CRI90 · Dimming · Tunable · 355° · 90° · IP20

Mona

The Mona series breaks away from the traditional cylindrical appearance of track lights with its unique design, featuring a delicate and compact exterior. It not only meets the demand for high-brightness illumination but also incorporates a honeycomb design to achieve anti-glare effects.
Application Space: Indoor spaces such as homes, stores, art spaces, and offices.

Mona 系列打破了軌道燈長筒狀的外觀印象，以其獨特設計的精緻迷你外觀脫穎而出，既滿足了對高亮度照明的需求，又增加了蜂巢設計以達到防眩效果。
適用空間：室內空間，如居家、門市、藝術空間、商辦。

Mona

ON | OFF · Triac 可控硅 · 0-10V · DALI · AMO Smart Lighting

Picture 圖片	Model Name 型號	Power Factor 整燈功率	Luminous Flux 光通量	BA. 光束角	Beam Type 光束類型	CCT 色溫
	T253	12W	650lm	17°/30°		2700K, 3000K, 4000K, Tunable

White/白 · Black/黑

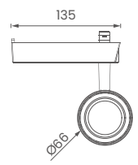

T253

*Lumen measured of the system (3000K).
*Technical information may change please refer to the datasheet.
*以上流明測量值以3000K為測量數據。
*技術信息可能會發生變化，請參閱規格書。

Unit 單位 | mm 公釐

Narrow Spot 極窄角 : <10° · Spot 窄角 : 11°-20° · Medium Spot 中角 : 21°-30° · Wide 廣角 : 31°-60° · Wide Flood 超廣角 : 61°-80°
Flood 泛光 : >81° · Wallwash 洗牆 · Oval 橢圓角 · Zoomable 調焦角 · Beam Shaper 切光

CRI90 · Dimming · Tunable · 355° · 90° · IP20

Alma

The Alma series breaks away from the previous design of track lighting that only focuses on illumination, and creates an environment where the whole wall is free of shadows, and is made for special facades with an excellent wall-washing effect.
Application Space: Suitable for home, store, gallery, commercial space, and exhibition space.

Alma 系列跳脫了以往軌道燈僅重點照明的設計，創造出整面牆都無陰暗處的環境，以卓越的洗牆效果專為特殊立面而生。
使用空間：適用於居家、門市、藝廊、商業空間和展覽空間。

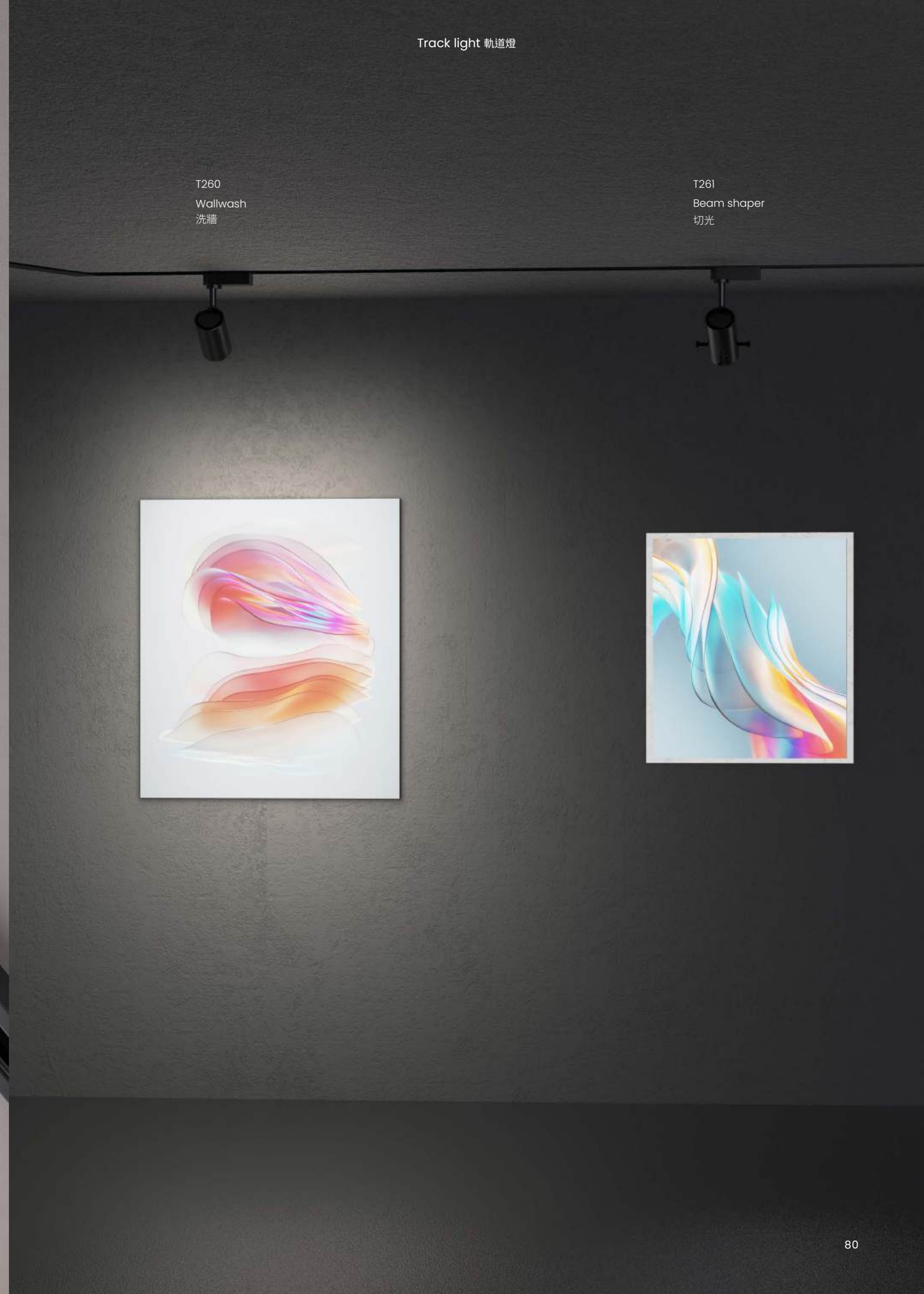

Alma

ON | OFF · Triac 可控硅 · 0-10V · DALI · AMO Smart Lighting

Picture 圖片	Model Name 型號	Power Factor 整燈功率	Luminous Flux 光通量	BA. 光束角	Beam Type 光束類型	CCT 色溫
	T260	12W	650lm	Wallwash 洗牆		2700K, 3000K, 4000K, Tunable
	T261	12W	190lm	Beam shaper 切光		2700K, 3000K, 4000K

Installation suggestion 安裝建議

White/白 · Black/黑

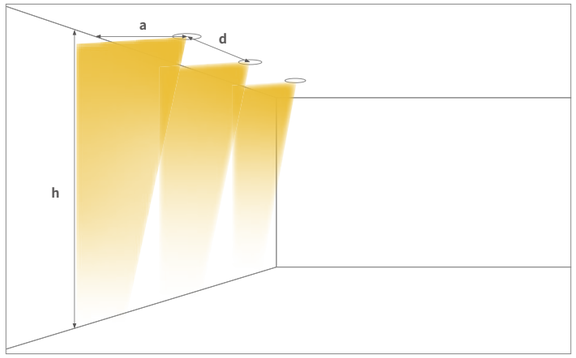

T260 is a 12W product.
The recommended installation distance is about 100cm from the wall, and each lamp is installed at a distance of 70cm.
T260 為12W產品，建議安裝在距離約在離牆100cm，每盞70cm間距裝一盞。
a = 1/4 h , d ≤ 0.7 a

＊**a** is the distance between the fixture and the wall;
d is the distance between each fixture;
h is the height of the floor.
＊**a**為燈具與牆面距離 ; **d**為每盞燈具間距離 ; **h**為樓板高度。

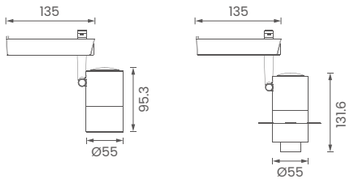

T260 T261

＊Lumen measured of the system (3000K).
＊Technical information may change please refer to the datasheet.
＊以上流明測量值以3000K為測量數據。
＊技術信息可能會發生變化，請參閱規格書。

Unit 單位 | mm 公釐

Narrow Spot 極窄角 : <10° · Spot 窄角 : 11°-20° · Medium Spot 中角 : 21°-30° · Wide 廣角 : 31°-60° · Wide Flood 超廣角 : 61°-80°
Flood 泛光 : >81° · Wallwash 洗牆 · Oval 橢圓角 · Zoomable 調焦角 · Beam Shaper 切光

CRI90 · Dimming · Tunable · 355° · 90° · IP20

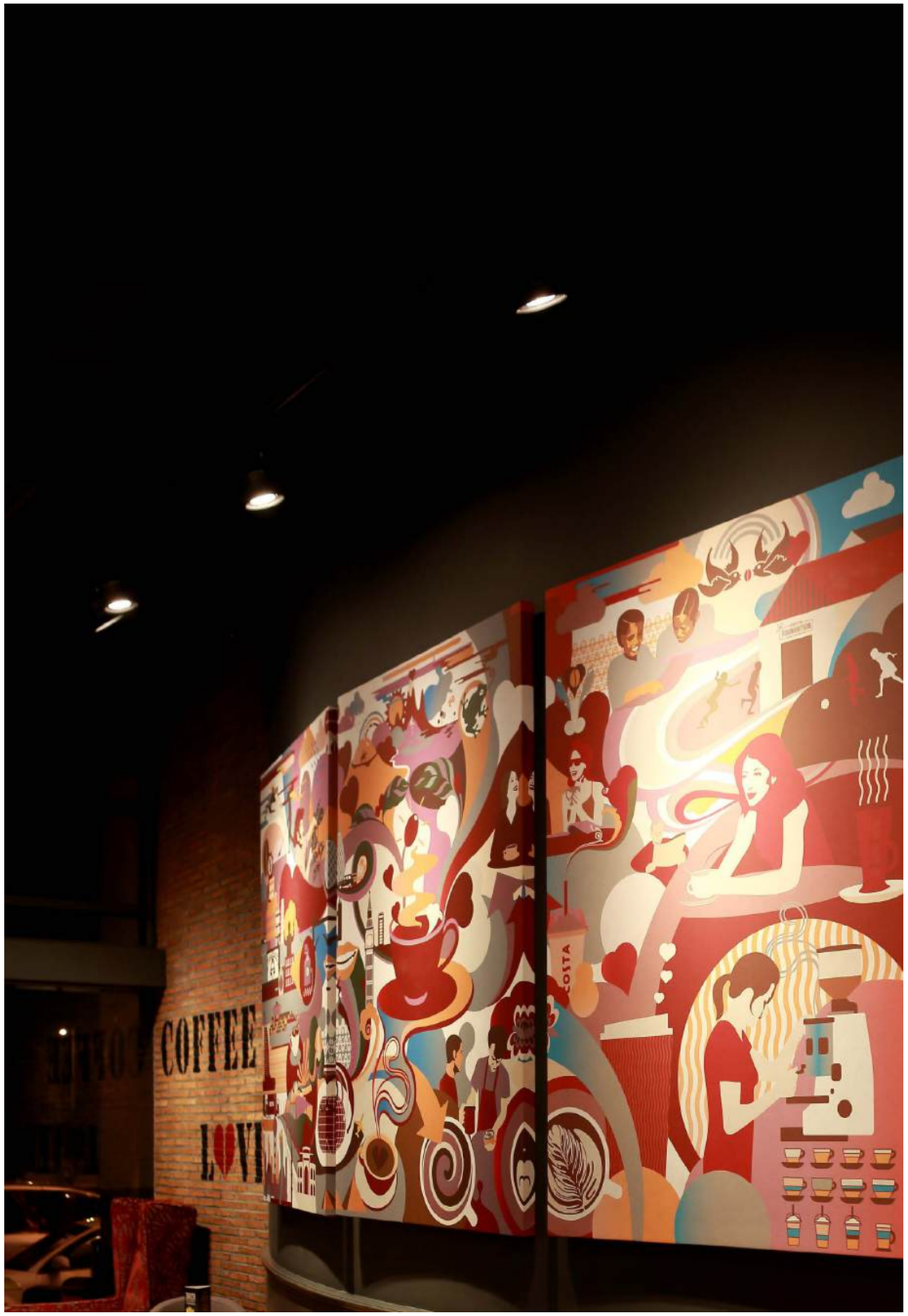

Mattis

The Mattis series offers the option to equip the same fixture with either "zoom" or "cut light" lenses, providing versatile lighting solutions.The cut light feature adjusts four light-shielding blades, allowing for the creation of circular, square, or trapezoidal light shapes to meet various cut light needs. The clarity of the light contour can be adjusted from blurry to sharp, offering control over the visual sharpness of the illumination boundary. Additionally, the zoom control for adjusting the size of the illuminated area ranges from 18 to 25 degrees.
Application Space: Suitable for art galleries, exhibition spaces, special venues, and commercial areas.

Mattis 系列可在同一機身上選擇搭載「變焦」與「切光」兩種鏡頭，提供更多照明選擇。切光功能可調整四片遮光蘭，產生圓形、方形、梯形等不同形狀的光，滿足各種切光需求。光的輪廓可從模糊到清晰，可調整照明邊界的視覺銳利度。而照射範圍大小的 Zoom 控制則可調整光圈角度在 18 至 25 度之間。
使用空間：適用於藝廊、展覽空間、特殊空間以及商業空間。

Mattis

ON | OFF · Triac 可控硅 · 0-10V · DALI · AMO Smart Lighting

Picture 圖片	Model Name 型號	Power Factor 整燈功率	Luminous Flux 光通量	BA. 光束角	Beam Type 光束類型	CCT 色溫
	T239	25W	1100lm	18°-25° Beam shaper 切光		2700K, 3000K, 4000K, Tunable

Black/黑

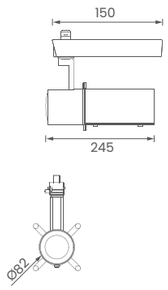

T239

∗Lumen measured of the system (3000K).
∗Technical information may change please refer to the datasheet.
∗以上流明測量值以3000K為測量數據。
∗技術信息可能會發生變化，請參閱規格書。

Unit 單位 | mm 公釐

Narrow Spot 極窄角 : <10° · Spot 窄角 : 11°-20° · Medium Spot 中角 : 21°-30° · Wide 廣角 : 31°-60° · Wide Flood 超廣角 : 61°-80°
Flood 泛光 : >81° · Wallwash 洗牆 · Oval 橢圓角 · Zoomable 調焦角 · Beam Shaper 切光

CRI90 · Dimmable · Tunable · 355° · 90° · IP20

Liya

The Liya series breaks away from the traditional design of high-wattage long track lights, featuring a simplified and compact fixture structure, with a distinctive exterior design.
Application Space: Suitable for commercial offices and large-scale commercial lighting.

Liya 系列突破了高瓦數經典長型軌道燈的設計，採用了簡潔且縮小的燈具結構，外觀設計也與眾不同。
使用空間：適用於商業辦公室和大型商業照明。

Liya

ON | OFF · Triac 可控硅 · 0-10V · DALI · AMO Smart Lighting

Picture 圖片	Model Name 型號	Power Factor 整燈功率	Luminous Flux 光通量	BA. 光束角	Beam Type 光束類型	CCT 色温
	T214	34W	3000lm	15°/24°/36°		2700K, 3000K, 4000K, Tunable

White/白 · Black/黑

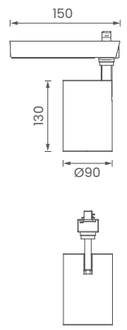

T214

*Lumen measured of the system (3000K).
*Technical information may change please refer to the datasheet.
*以上流明測量值以3000K為測量數據。
*技術信息可能會發生變化，請參閱規格書。

Unit 單位 | mm 公釐

Narrow Spot 極窄角 : <10° · Spot 窄角 : 11°-20° · Medium Spot 中角 : 21°-30° · Wide 廣角 : 31°-60° · Wide Flood 超廣角 : 61°-80°
Flood 泛光 : >81° · Wallwash 洗牆 · Oval 橢圓角 · Zoomable 調焦角 · Beam Shaper 切光

CRI90 · Dimming · Tunable · 355° · 90° · IP20

Bruno

The Bruno series combines the classic design of track lights with an inward-facing light emission design to prevent glare. The series offers three different wattage options to accommodate various customer needs in different spaces.
Application Space: Suitable for all spaces.

Bruno 系列融合了經典的軌道燈外觀設計，並加入了內縮發光的防眩設計。系列提供了三款不同瓦數的選擇，以滿足客戶各種需求的空間。
使用空間：適用於各種空間。

Bruno

ON | OFF · Triac 可控硅 · 0-10V · DALI · AMO Smart Lighting

Picture 圖片	Model Name 型號	Power Factor 整燈功率	Luminous Flux 光通量	BA. 光束角	Beam Type 光束類型	CCT 色溫
	T241	15W	1200lm	15°/24°/36°		2700K 4000K 3000K Tunable
	T242	24W	1850lm	15°/24°/36°		2700K 4000K 3000K Tunable
	T243	40W	3500lm	15°/24°/36°		2700K 4000K 3000K Tunable

White/白 · Black/黑

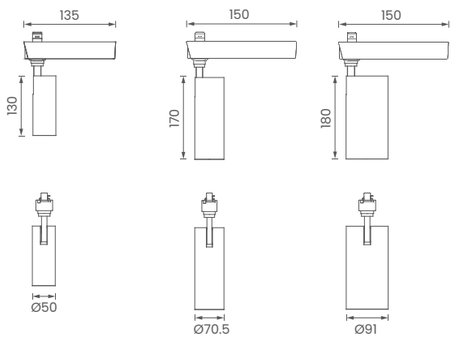

T241 T242 T243

*Lumen measured of the system (3000K).
*Technical information may change please refer to the datasheet.
*以上流明測量值以3000K為測量數據。
*技術信息可能會發生變化，請參閱規格書。

Unit 單位 | mm 公釐

Narrow Spot 極窄角 : <10° · Spot 窄角 : 11°-20° · Medium Spot 中角 : 21°-30° · Wide 廣角 : 31°-60° · Wide Flood 超廣角 : 61°-80°

Flood 泛光 : >81° · Wallwash 洗牆 · Oval 橢圓角 · Zoomable 調焦角 · Beam Shaper 切光

CRI90 · Dimming · Tunable · 355° · 90° · IP20

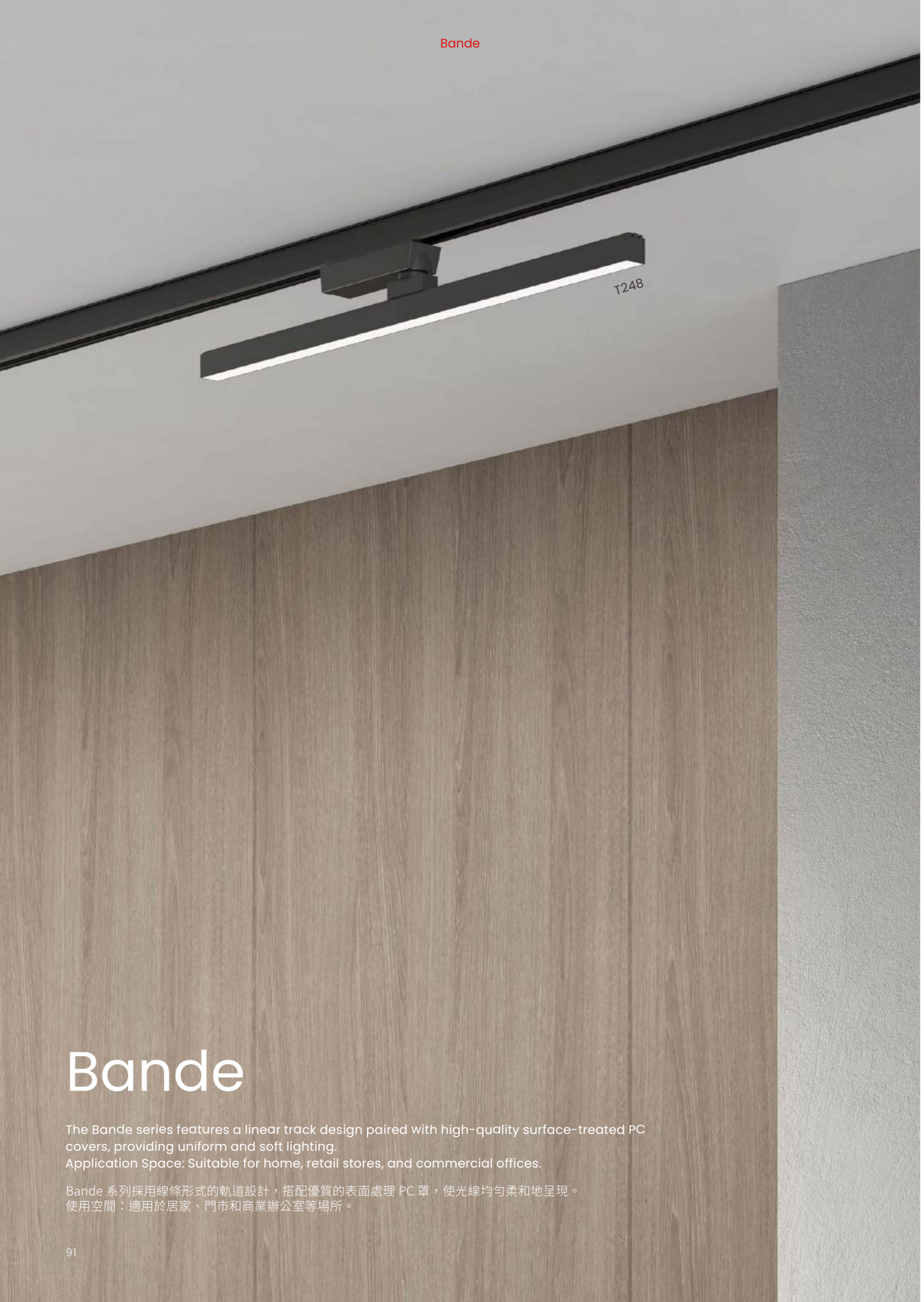

Bande

The Bande series features a linear track design paired with high-quality surface-treated PC covers, providing uniform and soft lighting.
Application Space: Suitable for home, retail stores, and commercial offices.

Bande 系列採用線條形式的軌道設計，搭配優質的表面處理 PC 罩，使光線均勻柔和地呈現。
使用空間：適用於居家、門市和商業辦公室等場所。

Bande

ON | OFF · Triac 可控硅 · 0-10V · DALI · AMO Smart Lighting

Picture 圖片	Model Name 型號	Power Factor 整燈功率	Luminous Flux 光通量	BA. 光束角	Beam Type 光束類型	CCT 色溫
	T248	20W	800lm	Flood 泛光		2700K, 3000K, 4000K, Tunable

White/白 · Black/黑

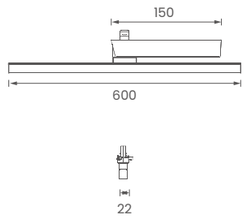

T248

＊Lumen measured of the system (3000K).
＊Technical information may change please refer to the datasheet.
＊以上流明測量值以3000K為測量數據。
＊技術信息可能會發生變化，請參閱規格書。

Unit 單位 | mm 公釐

Narrow Spot 極窄角 : <10° · Spot 窄角 : 11°-20° · Medium Spot 中角 : 21°-30° · Wide 廣角 : 31°-60° · Wide Flood 超廣角 : 61°-80°
Flood 泛光 : >81° · Wallwash 洗牆 · Oval 橢圓角 · Zoomable 調焦角 · Beam Shaper 切光

CRI90 · Dimming · Tunable · IP20

Rino

Features of the Rino series include a removable housing that allows you to easily replace the housing with three different colors. In addition, with three adjustable color temperatures (3000/4000/6000K), you can adjust the color temperature of the light according to your needs.

Rino 系列的特點包括可拆卸式外殼，讓您輕鬆更換三種不同顏色的外殼。另外，配備三段式可調色溫（3000/4000/6000K），您可以根據需要去調整光線的色溫。

Rino

ON | OFF　switch-dim 撥桿調色

Picture 圖片	Model Name 型號	Power Factor 整燈功率	Luminous Flux 光通量	BA. 光束角	Beam Type 光束類型	CCT 色溫
	T210	7W	570lm	24°/36°		3000K 4000K 6000K
	T211	15W	1220lm	15°/24°/36°		3000K 4000K 6000K
	T212	25W	2100lm	15°/24°/36°		3000K 4000K 6000K

Accessories 配件

Magnetic filter 磁吸濾片

Honeycomb

White/白　Black/黑　Rose gold/玫瑰金

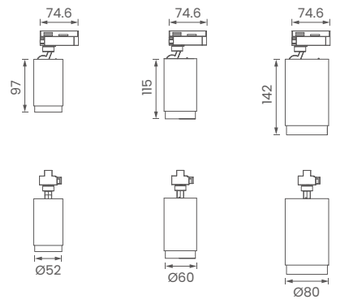

*Lumen measured of the system (3000K).
*Technical information may change please refer to the datasheet.
*以上流明測量值以3000K為測量數據。
*技術信息可能會發生變化，請參閱規格書。

Unit 單位 | mm 公釐

Narrow Spot 極窄角 : <10°　Spot 窄角 : 11°-20°　Medium Spot 中角 : 21°-30°　Wide 廣角 : 31°-60°　Wide Flood 超廣角 : 61°-80°

Flood 泛光 : >81°　Wallwash 洗牆　Oval 橢圓角　Zoomable 調焦角　Beam Shaper 切光

CRI90　355°　90°　IP20

Cubie

Cubie series is a powerful high-flexible track light.In this modular system the fixture is separated into body and optic module, allowing the user to exchange the optic and therefore the beam angle at anytime without changing the fixture itself.

Cubie 系列是功能強大的高彈性軌道燈。在這個模組化系統中，燈具分為燈體和光學模組，使用者可以隨時更換光學模組及光束角度，而無需變更燈具本體。

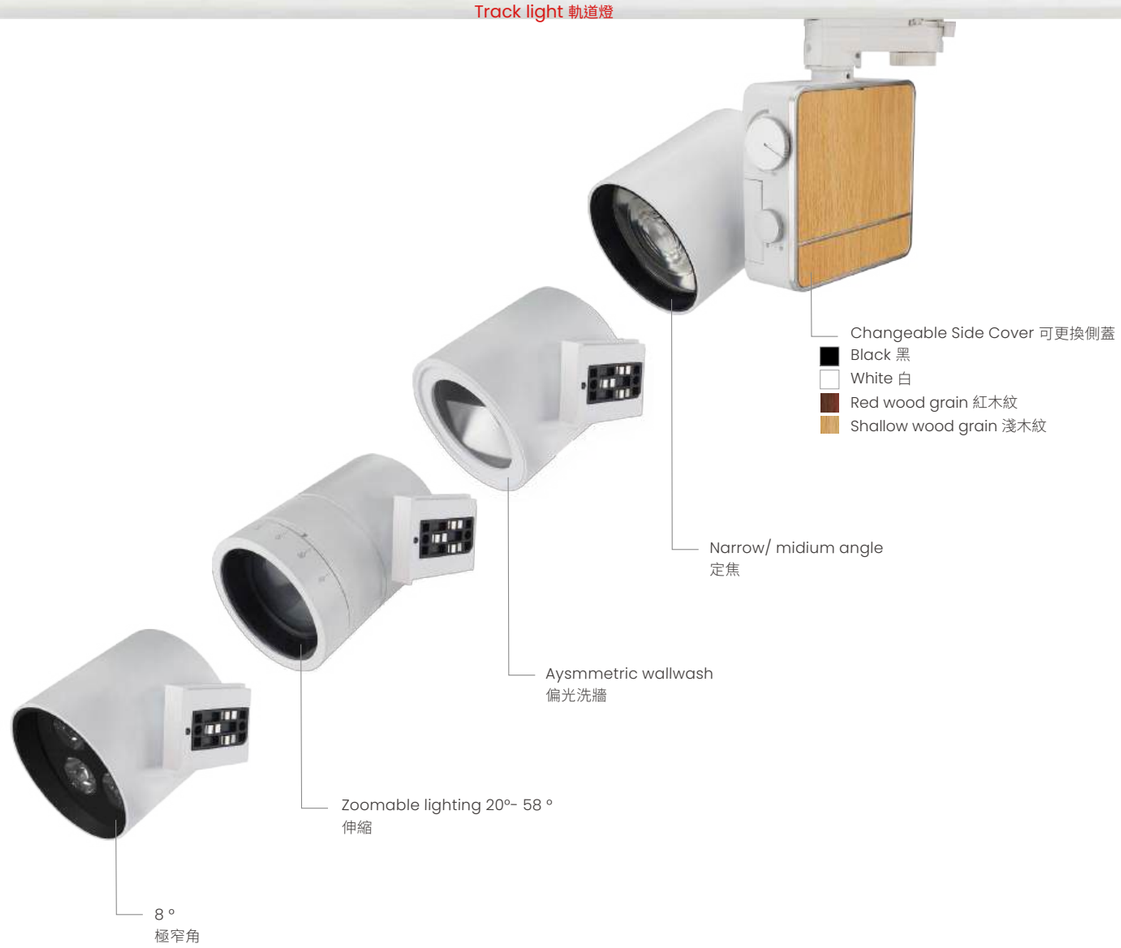

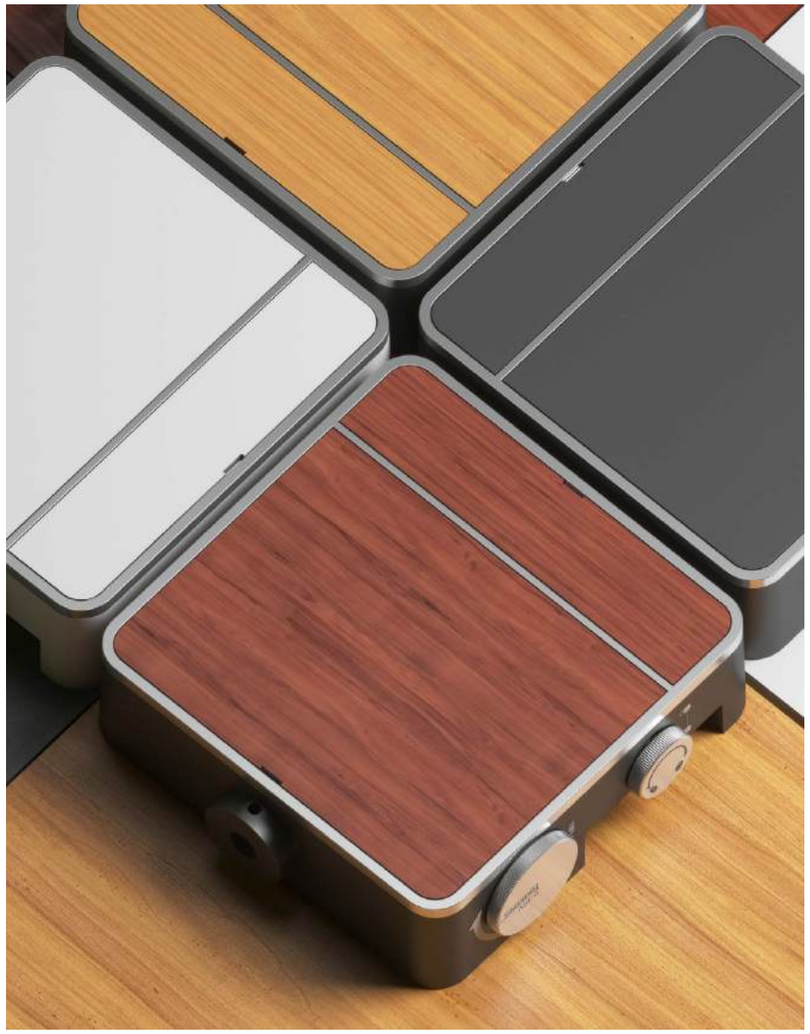

Evolution of Light 燈具的新革命

Cubie track light provides the simplest way to change the light module and the outlook pattern.
Cubie 軌道燈提供最簡易更換模組的系統，不須工具即可替換模組外觀圖樣。

Fast change the light module without tool.
通過推拉固定裝置，快速更換燈具模組

Cubie

on-board dimming

Picture 圖片	Model Name 型號	Power Factor 整燈功率	Luminous Flux 光通量	BA. 光束角	Beam Type 光束類型	CCT 色溫
	T344	35W	2280lm	20-58°		2700K 3000K 4000K
	T345	35W	3400lm	15°/24°/36°		2700K 3000K 4000K
	T346	35W	2400lm	Wallwash 洗牆		2700K 3000K 4000K
	T347	22W	1750lm	8°		2700K 3000K 4000K

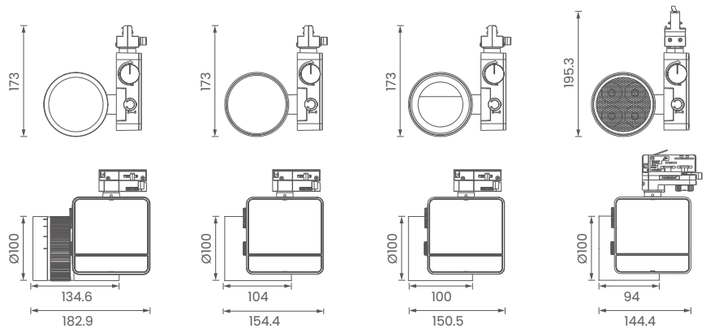

T344 T345 T346 T347

∗Lumen measured of the system (3000K).
∗Technical information may change please refer to the datasheet.
∗以上流明測量值以3000K為測量數據。
∗技術信息可能會發生變化，請參閱規格書。

Unit 單位 | mm 公釐

Narrow Spot 極窄角 : <10° Spot 窄角 : 11°-20° Medium Spot 中角 : 21°-30° Wide 廣角 : 31°-60° Wide Flood 超廣角 : 61°-80°
Flood 泛光 : >81° Wallwash 洗牆 Oval 橢圓角 Zoomable 調焦角 Beam Shaper 切光

CRI90 Dimming 355° 90° IP20

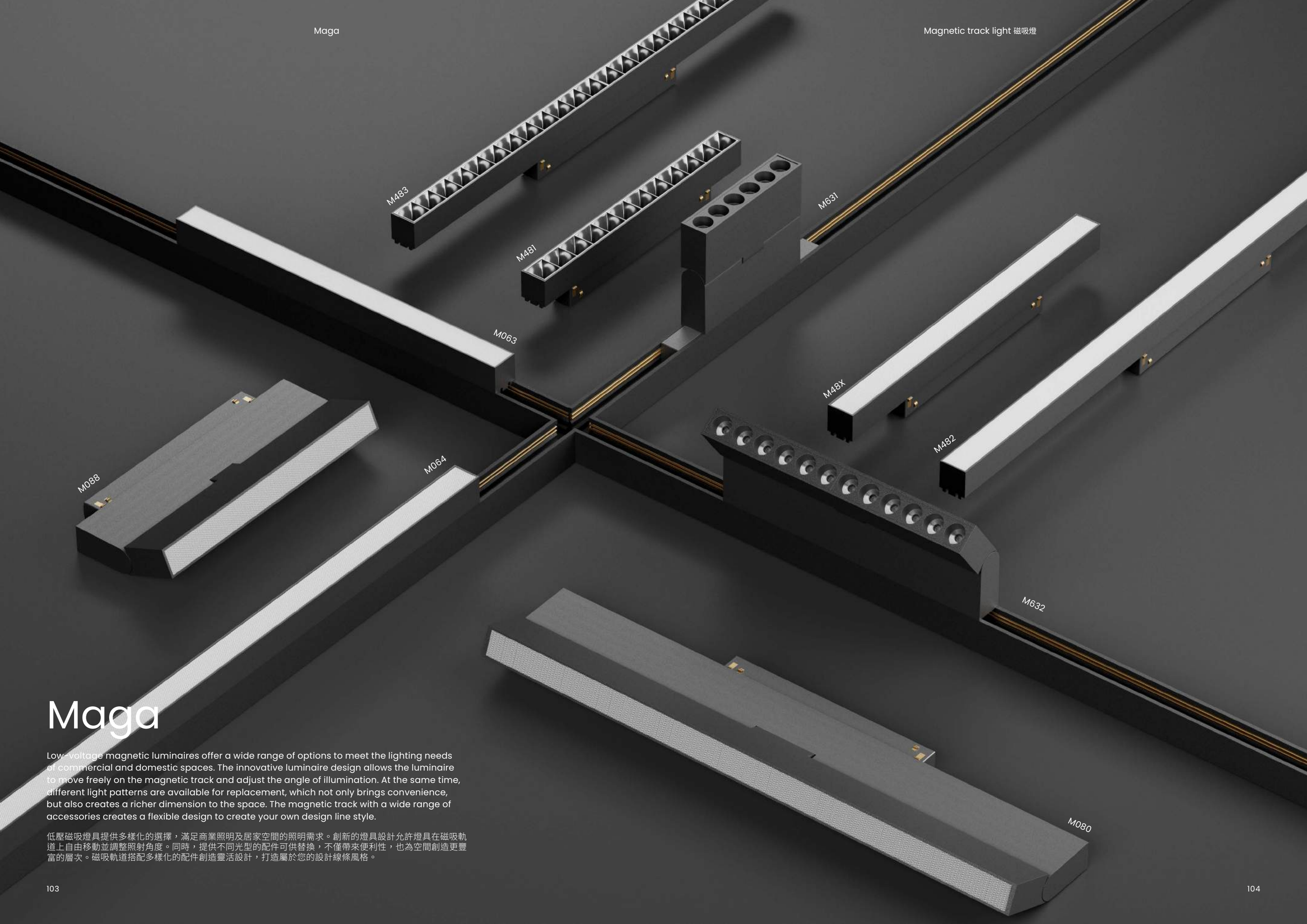

Maga

Low-voltage magnetic luminaires offer a wide range of options to meet the lighting needs of commercial and domestic spaces. The innovative luminaire design allows the luminaire to move freely on the magnetic track and adjust the angle of illumination. At the same time, different light patterns are available for replacement, which not only brings convenience, but also creates a richer dimension to the space. The magnetic track with a wide range of accessories creates a flexible design to create your own design line style.

低壓磁吸燈具提供多樣化的選擇，滿足商業照明及居家空間的照明需求。創新的燈具設計允許燈具在磁吸軌道上自由移動並調整照射角度。同時，提供不同光型的配件可供替換，不僅帶來便利性，也為空間創造更豐富的層次。磁吸軌道搭配多樣化的配件創造靈活設計，打造屬於您的設計線條風格。

Maga

Magnetic track light 磁吸燈

The DC low voltage feature enhances the safety of the lighting fixture, and the solid core copper strips with high quality raw materials can ensure the stable output and avoid the risk of bad contact.

直流低電壓的特性提升燈具安全性，原料品質優良的實芯銅條可保證穩定輸出，避免接觸不良風險。

Maga

ON | OFF · 0-10V · DALI · CASAMBI · AMO Smart Lighting

Picture 圖片	Model Name 型號	Power Factor 整燈功率	Luminous Flux 光通量	BA. 光束角	Beam Type 光束類型	CCT 色溫
	M063	12W	460lm	Flood 泛光		2700K 3000K 4000K Tunable
	M064	24W	1000lm	Flood 泛光		2700K 3000K 4000K Tunable
	M48X	10W	500lm	Flood 泛光		2700K 3000K 4000K Tunable
	M482	20W	800lm	Flood 泛光		2700K 3000K 4000K Tunable
	M481	10W	430lm	24°		2700K 3000K 4000K
	M483	20W	700lm	24°		2700K 3000K 4000K

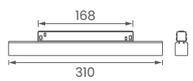

M063

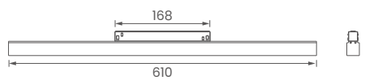

M064

M48X

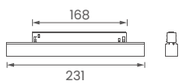

M481

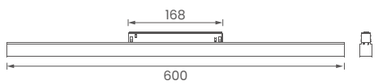

M482

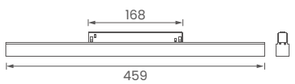

M483

*Lumen measured of the system (3000K).
*Technical information may change please refer to the datasheet.
*以上流明測量值以3000K為測量數據。
*技術信息可能會發生變化，請參閱規格書。

Unit 單位 | mm 公釐

Narrow Spot 極窄角 : <10° · Spot 窄角 : 11°-20° · Medium Spot 中角 : 21°-30° · Wide 廣角 : 31°-60° · Wide Flood 超廣角 : 61°-80°
Flood 泛光 : >81° · Wallwash 洗牆 · Oval 橢圓角 · Zoomable 調焦角 · Beam Shaper 切光

CRI90 · Dimming · Tunable · IP20

Maga

ON | OFF · 0-10V · DALI · CASAMBI · AMO Smart Lighting

Picture 圖片	Model Name 型號	Power Factor 整燈功率	Luminous Flux 光通量	BA. 光束角	Beam Type 光束類型	CCT 色溫
	M631 90°	6W	450lm	24°		2700K 3000K 4000K Tunable
	M632 90°	12W	860lm	24°		2700K 3000K 4000K Tunable
	M088 180°	12W	460lm	Flood 泛光		2700K 3000K 4000K Tunable
	M080 180°	24W	1000lm	Flood 泛光		2700K 3000K 4000K Tunable

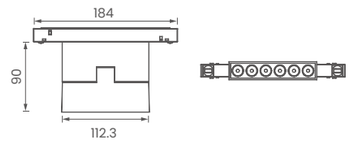

M631

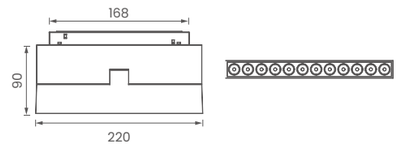

M632

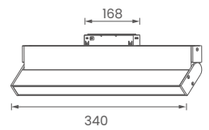

M088

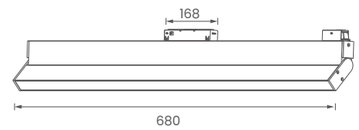

M080

*Lumen measured of the system (3000K).
*Technical information may change please refer to the datasheet.
*以上流明測量值以3000K為測量數據。
*技術信息可能會發生變化，請參閱規格書。

Unit 單位 | mm 公釐

Narrow Spot 極窄角 : <10° · Spot 窄角 : 11°-20° · Medium Spot 中角 : 21°-30° · Wide 廣角 : 31°-60° · Wide Flood 超廣角 : 61°-80°
Flood 泛光 : >81° · Wallwash 洗牆 · Oval 橢圓角 · Zoomable 調焦角 · Beam Shaper 切光

CRI90 · Dimming · Tunable · IP20

Maga

Maga

ON | OFF · 0-10V · DALI · CASAMBI · AMO Smart Lighting

Picture 圖片	Model Name 型號	Power Factor 整燈功率	Luminous Flux 光通量	BA. 光束角	Beam Type 光束類型	CCT 色溫
	M31X	10W	370lm	18°-45°		2700K 3000K 4000K Tunable
	M32X	10W	420lm	10°		2700K 3000K 4000K
	M33X	10W	570lm	15°		2700K 3000K 4000K Tunable
	M53X	12W	650lm	17°/30°		2700K 3000K 4000K Tunable
	M451	15W	1200lm	15°/24°/36°		2700K 3000K 4000K Tunable
	M52X	5W	360lm	15°/24°/36°		2700K 3000K 4000K
	M521	10W	420lm	10°		2700K 3000K 4000K

Accessories 配件

Ø45 Magnetic filter ｜For models M32X, M33X, M521
Ø45 磁吸濾片｜適用於型號M32X、M33X、M521

15° 24° 38° 10°x35° Honeycomb

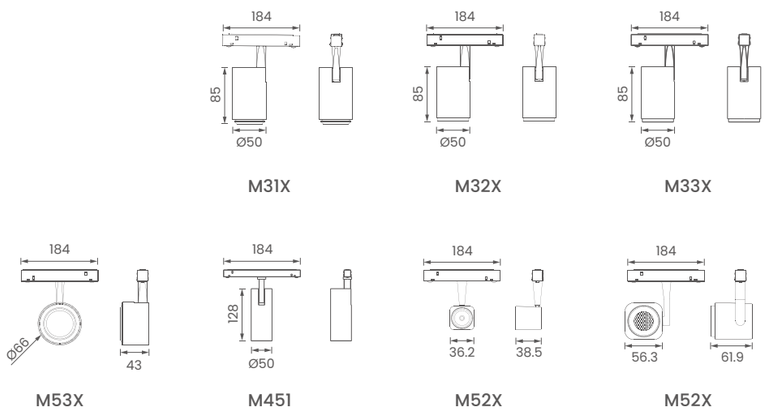

＊Lumen measured of the system (3000K).
＊Technical information may change please refer to the datasheet.
＊以上流明測量值以3000K為測量數據。
＊技術信息可能會發生變化，請參閱規格書。

Unit 單位 | mm 公釐

Narrow Spot 極窄角 : <10° · Spot 窄角 : 11°-20° · Medium Spot 中角 : 21°-30° · Wide 廣角 : 31°-60° · Wide Flood 超廣角 : 61°-80°
Flood 泛光 : >81° · Wallwash 洗牆 · Oval 橢圓角 · Zoomable 調焦角 · Beam Shaper 切光

CRI90 · Dimming · Tunable · 355° · 90° · IP20

Maga

ON | OFF · 0-10V · DALI · CASAMBI · AMO Smart Lighting

Picture 圖片	Model Name 型號	Power Factor 整燈功率	Luminous Flux 光通量	BA. 光束角	Beam Type 光束類型	CCT 色溫
	M55X	7W	400lm	15°/24°/36°		2700K 3000K 4000K Tunable
	M501 *	10W	420lm	10°		2700K 3000K 4000K
	M60X	12W	640lm	Wallwash 洗牆		2700K 3000K 4000K Tunable
	M61X	12W	190lm	Beam Shaper 切光		2700K 3000K 4000K

Note 備註

Models with * are not rotatable or swingable.
帶 * 型號不可旋轉也不可搖擺。

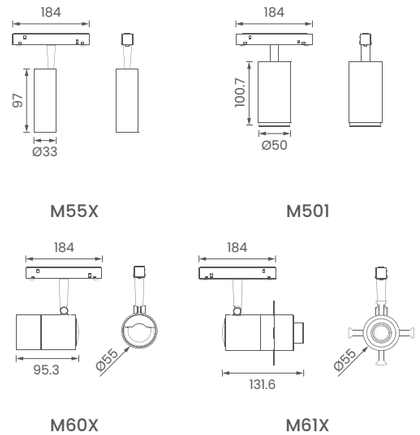

＊Lumen measured of the system (3000K).
＊Technical information may change please refer to the datasheet.
＊以上流明測量值以3000K為測量數據。
＊技術信息可能會發生變化，請參閱規格書。

Unit 單位 | mm 公釐

Narrow Spot 極窄角 : <10° · Spot 窄角 : 11°-20° · Medium Spot 中角 : 21°-30° · Wide 廣角 : 31°-60° · Wide Flood 超廣角 : 61°-80°
Flood 泛光 : >81° · Wallwash 洗牆 · Oval 橢圓角 · Zoomable 調焦角 · Beam Shaper 切光

CRI90 · Dimming · Tunable · 355° · 90° · IP20

Maga

Lighting fixtures have been developing towards smaller and more compact, choosing a 48V low voltage system means that there is no need to install a separate driver for each lighting fixture, making the fixture design even more sophisticated. Refined fixture design not only provides sufficient illumination, but also turns lighting into a form of installation art. Special rotary shaft technology enables the fixtures to rotate smoothly to various illumination angles. High-quality machining and surface treatment successfully show the aesthetics of the lamps.

Application Space: home, store, small business office/commercial photo, art museum, cafe, places that focus on atmosphere creation.

照明燈具一直向小型精緻化發展，選擇 48V 低壓系統代表不需要為每個照明設備安裝獨立的驅動器，使燈具設計更加精緻。精緻化的燈具設計不僅可提供足夠的照明，還可以使照明成為一種裝置藝術。特殊的轉軸工藝技術使燈具能順暢轉至各種照射角度。高品質的加工及表面處理工藝成功展現了燈具的美學。

適用空間：居家、門市、小型商辦 / 商照、美術館、咖啡廳，專注氣氛營造的場所。

Maga

Maga

ON | OFF · 0-10V · DALI · CASAMBI · AMO Smart Lighting

Picture 圖片	Model Name 型號	Power Factor 整燈功率	Luminous Flux 光通量	BA. 光束角	Beam Type 光束類型	CCT 色溫
	M21X	10W	420lm	10°		2700K 3000K 4000K Tunable
	M25X	7W	610lm	24°		2700K 3000K 4000K Tunable

Accessories 配件

Ø45 Magnetic filter ｜For models M21X
Ø45 磁吸濾片｜適用於型號21X

15° 24° 38° 10°x35° Honeycomb

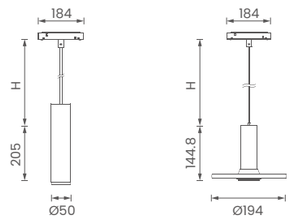

M21X M25X

＊Lumen measured of the system (3000K).
＊Technical information may change please refer to the datasheet.
＊以上流明測量值以3000K為測量數據。
＊技術信息可能會發生變化，請參閱規格書。

Unit 單位 | mm 公釐

Narrow Spot 極窄角 : <10° · Spot 窄角 : 11°-20° · Medium Spot 中角 : 21°-30° · Wide 廣角 : 31°-60° · Wide Flood 超廣角 : 61°-80°
Flood 泛光 : >81° · Wallwash 洗牆 · Oval 橢圓角 · Zoomable 調焦角 · Beam Shaper 切光

CRI90 · Dimming · Tunable · IP20

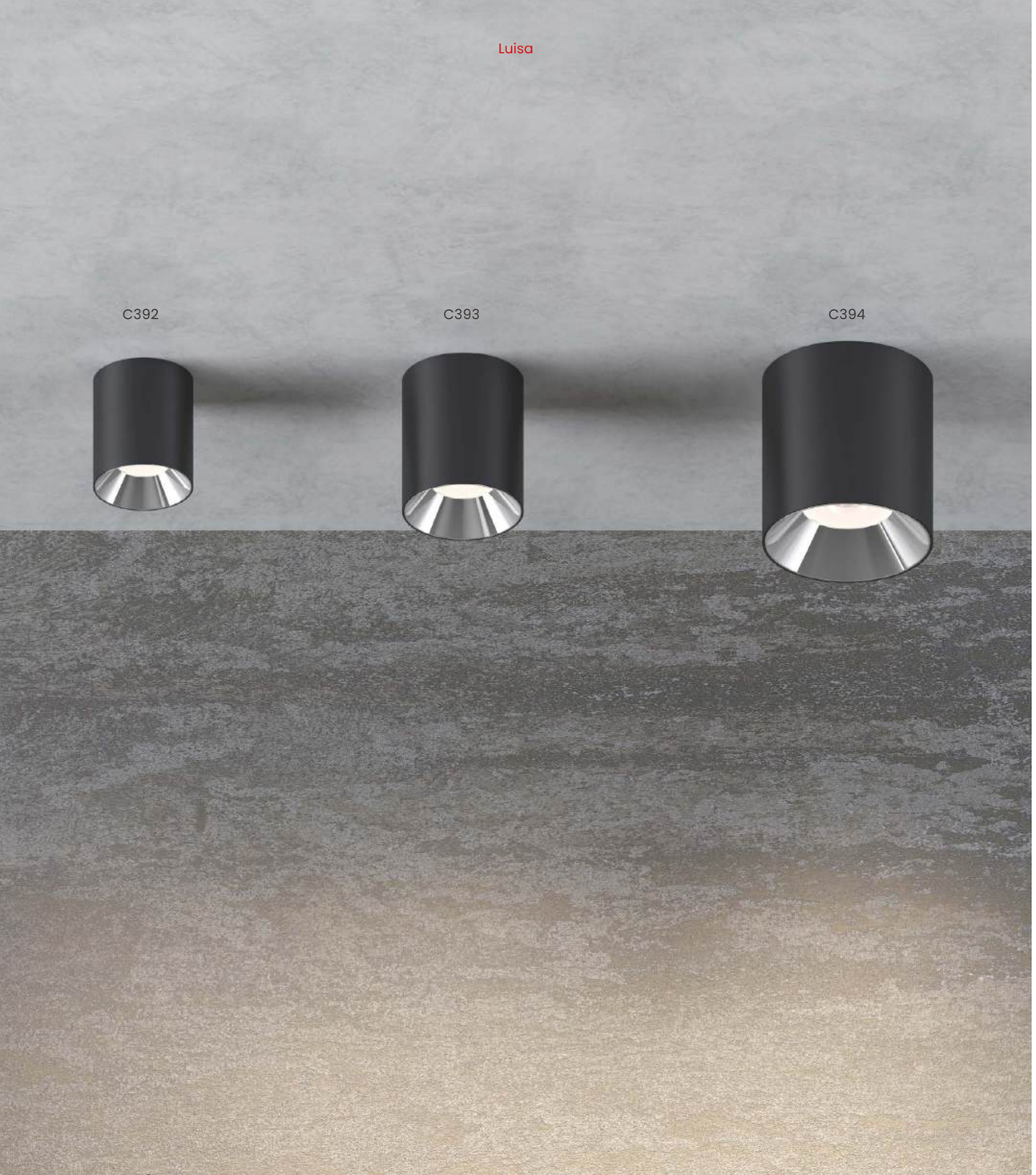

Luisa

The Luisa series is a slim barrel ceiling light for small localized base lighting with an anti-glare design that adds a honeycomb mesh.
Application Space: home, market, large commercial lighting, and business office.

Luisa 系列是一款細長桶狀的吸頂燈，適用於小範圍局部基礎照明，並配備了增加蜂巢網的防眩設計。
適用空間：居家、門市、大型商業照明 / 商辦。

Luisa

ON | OFF · Triac 可控硅 · 0-10V · DALI · AMO Smart Lighting

Picture 圖片	Model Name 型號	Power Factor 整燈功率	Luminous Flux 光通量	BA. 光束角	Beam Type 光束類型	CCT 色溫
	C392	15W	1070lm	74°		2700K 3000K 4000K
	C393	24W	1650lm	75°		2700K 3000K 4000K Tunable
	C394	38W	2800lm	78°		2700K 3000K 4000K Tunable

White/白 · Black/黑

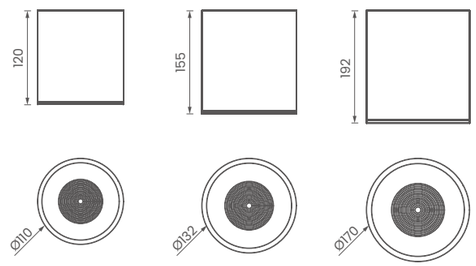

C392 C393 C394

*Lumen measured of the system (3000K).
*Technical information may change please refer to the datasheet.
*以上流明測量值以3000K為測量數據。
*技術信息可能會發生變化，請參閱規格書。

Unit 單位 | mm 公釐

Narrow Spot 極窄角 : <10° · Spot 窄角 : 11°-20° · Medium Spot 中角 : 21°-30° · Wide 廣角 : 31°-60° · Wide Flood 超廣角 : 61°-80°
Flood 泛光 : >81° · Wallwash 洗牆 · Oval 橢圓角 · Zoomable 調焦角 · Beam Shaper 切光

CRI90 · Dimming · Tunable · IP20

Luna

The Luna series is a chunky barrel shaped ceiling light designed for basic lighting in large spaces with a soft anti-glare design. Used in a wide range of applications such as shopping malls, restaurants, stores and supermarkets, the Luna series offers a complete range of solutions in a variety of wattages, sizes and finishes, making it ideal for use in industrial style ceilings.

Luna 系列採用矮胖桶形狀的吸頂燈設計，適用於大範圍空間的基礎照明，同時具備柔光防眩設計。其廣泛的應用場景包括賣場、餐廳、店鋪和超市等。Luna 系列提供了完整的解決方案，包括不同瓦數、尺寸和外觀風格，是工業風格天花板照明的理想之選。

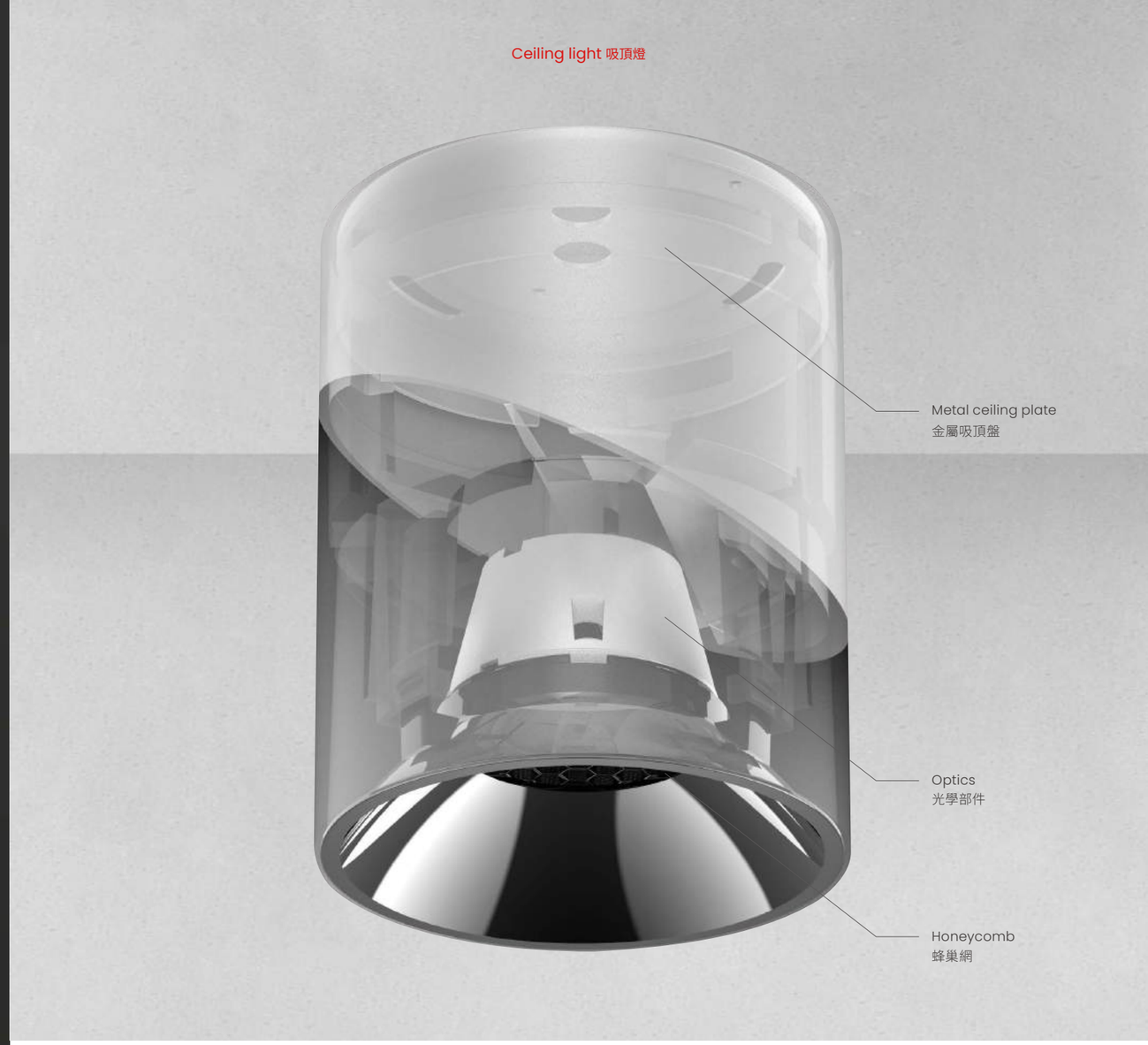

Easy installation
簡易安裝

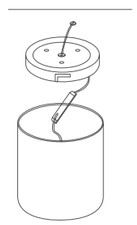

Turn off the electricity.Connect the live and neutral cable to the LN cables of the driver.

關閉電力，連接 L、N 線至驅動器

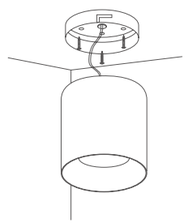

Fixed the ceiling plate onto the ceiling.

固定吸頂盤至天花板

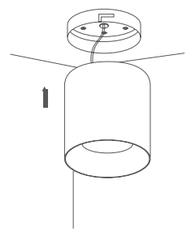

Place the light on the ceiling plate and rotate the retaining clips.

筒燈放上吸頂盤並旋轉固定卡扣

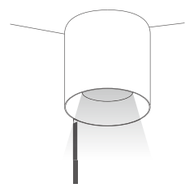

Turn the power back on and light is on.

打開電源

Luna

ON | OFF · Triac 可控硅 · 0-10V · DALI · AMO Smart Lighting

Picture 圖片	Model Name 型號	Power Factor 整燈功率	Luminous Flux 光通量	BA. 光束角	Beam Type 光束類型	CCT 色溫
	C461	10W	600lm	15°/24°		2700K 3000K 4000K
	C462	20W	1030lm	15°/24°/36°		2700K 3000K 4000K
	C463	30W	1590lm	15°/24°/36°		2700K 3000K 4000K Tunable

White/白 · Black/黑

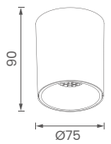

C461

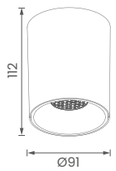

C462

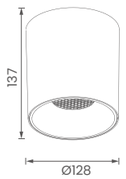

C463

∗Lumen measured of the system (3000K).
∗Technical information may change please refer to the datasheet.
∗以上流明測量值以3000K為測量數據。
∗技術信息可能會發生變化，請參閱規格書。

Unit 單位 | mm 公釐

Narrow Spot 極窄角 : <10° · Spot 窄角 : 11°-20° · Medium Spot 中角 : 21°-30° · Wide 廣角 : 31°-60° · Wide Flood 超廣角 : 61°-80°
Flood 泛光 : >81° · Wallwash 洗牆 · Oval 橢圓角 · Zoomable 調焦角 · Beam Shaper 切光

CRI90 · Dimming · Tunable · IP20

Ami

The Ami series offers a magnetic optical filter for easy installation, allowing effortless adjustment of the desired lighting angle to create stunning lighting effects, providing diverse and appealing solutions for various settings.
Application Space: homes, retail stores, commercial lighting, and offices.

Ami 系列提供磁吸式的光學濾片，安裝簡便，輕鬆更換所需的照射角度，營造令人驚豔的照明效果，為各種場景提供多樣化和吸引人的解決方案。
適用空間：居家、門市、商照、商辦。

Ami

ON | OFF · Triac 可控硅 · 0-10V · DALI · AMO Smart Lighting

Picture 圖片	Model Name 型號	Power Factor 整燈功率	Luminous Flux 光通量	BA. 光束角	Beam Type 光束類型	CCT 色溫
	P21X	10W	420lm	10°		2700K, 3000K, 4000K, Tunable

Accessories 配件

White/白 · Black/黑

Ø45 Magnetic filter | | For models P21X
Ø45 磁吸濾片 | 適用於型號P21X

15° · 24° · 38° · 10°x35° · Honeycomb

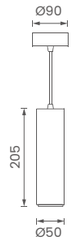

P21X

*Lumen measured of the system (3000K).
*Technical information may change please refer to the datasheet.
*以上流明測量值以3000K為測量數據。
*技術信息可能會發生變化，請參閱規格書。

Unit 單位 | mm 公釐

Narrow Spot 極窄角 : <10° · Spot 窄角 : 11°-20° · Medium Spot 中角 : 21°-30° · Wide 廣角 : 31°-60° · Wide Flood 超廣角 : 61°-80°
Flood 泛光 : >81° · Wallwash 洗牆 · Oval 橢圓角 · Zoomable 調焦角 · Beam Shaper 切光

CRI90 · Dimming · Tunable · IP20

Navia

The Navia series features unique disc-shaped pendant lights that diffuse light to create a distinctive style. It serves as both a focal point for illumination and an enchanting ambient light.
Application Space: home dining areas, side tables, bedside cabinets, and commercial spaces.

Navia 系列的獨特飛碟盤吊燈以其擴散的暈光呈現，展現出獨特的風格。它可以作為照明的亮點，也可以營造迷人的氛圍。
適用空間：居家餐桌、邊桌、床頭櫃及商用空間。

Navia

ON | OFF · Triac 可控硅 · 0-10V · DALI · AMO Smart Lighting

Picture 圖片	Model Name 型號	Power Factor 整燈功率	Luminous Flux 光通量	BA. 光束角	Beam Type 光束類型	CCT 色溫
	P25X	7W	610lm	24°		3000K, 4000K, 5700K, Tunable
	P251	7W	360lm	24°		2700K, 3000K, 4000K, Tunable

White/白 · Black/黑

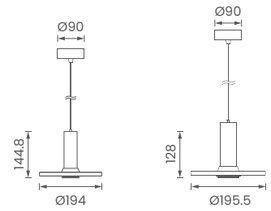

P25X P251

*Lumen measured of the system (3000K).
*Technical information may change please refer to the datasheet.
*以上流明測量值以3000K為測量數據。
*技術信息可能會發生變化，請參閱規格書。

Unit 單位 | mm 公釐

Narrow Spot 極窄角 : <10° · Spot 窄角 : 11°-20° · Medium Spot 中角 : 21°-30° · Wide 廣角 : 31°-60° · Wide Flood 超廣角 : 61°-80°
Flood 泛光 : >81° · Wallwash 洗牆 · Oval 橢圓角 · Zoomable 調焦角 · Beam Shaper 切光

CRI90 · Dimming · Tunable · IP20

Robo control system

Robo 系列控制系統

Robo control system

Welcome to luminaire mastery – the all-encompassing Control Center that redefines how you engage with lighting. Our "smart control" revolutionizes the way you interact with luminaires, placing a suite of features at your fingertips through intuitive apps. Intuitively adjust brightness, color temperature, and more, as your device transforms into a powerful controller for a personalized lighting experience. The Robo Control system employs mesh network technology capabilities, forging a network of interconnected luminaires. This mesh network ensures robust and reliable communication, allowing your luminaires to work in harmony, responding to your commands with precision. Immerse yourself in the synergy of smart control and mesh network connectivity, redefining the landscape of luminaire intelligence. Welcome to a new era of luminaire intelligence.

Robo 系列控制系統

歡迎來到自動燈具控制系統時代，它將會重新定義您與照明的互動方式。我們的控制系統透過直覺的應用程式將一系列功能置於您的指尖。您可以直覺地調整亮度、色溫等，讓您的裝置轉變為強大的遙控器，並提供個人化的照明體驗。RoboControl 系統採用網狀網路技術，打造互連的燈具網路。此網狀網路可確保穩定可靠的通信，使您的燈具能夠協調工作，精確地回應您的命令。讓我們重新定義燈具，迎接燈具智能化新時代。

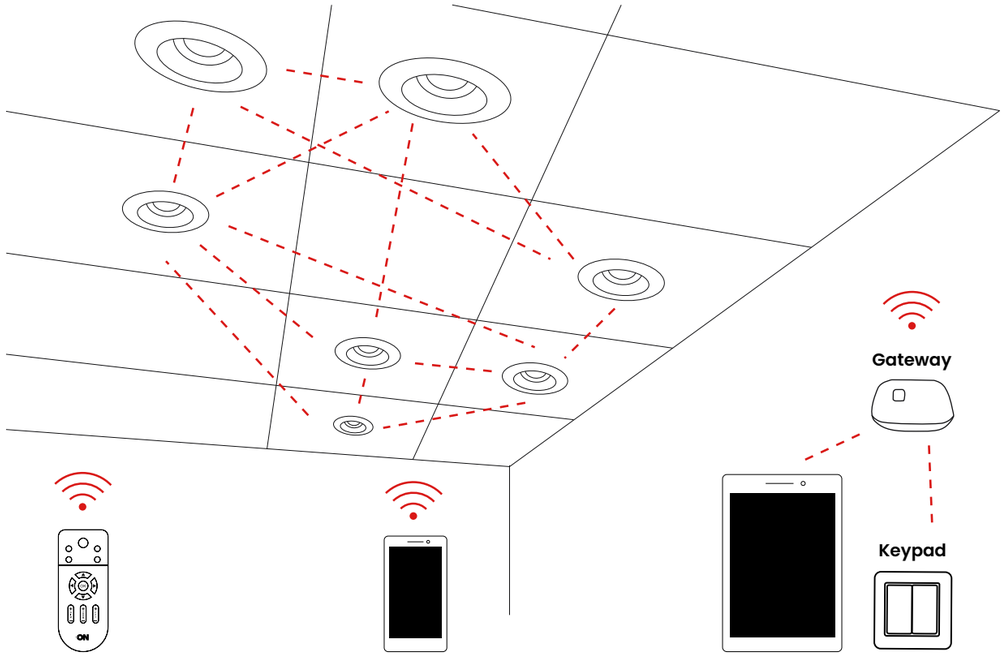

2.4G Remote Control 遙控器

LynxLite (Bluetooth)
IOS

LynxPro (ZigBee)
Android

* ZigBee keypad can be choosen from the market, for example Jung / EnOcean.
* 可從市場上選擇 ZigBee 鍵盤，例如 Jung / EnOcean。

Grouping Fixtures

Streamline management by grouping fixtures for intuitive and efficient control of individual lighting scenes.

燈具群控

透過將燈具進行分群來管理，使您能夠直觀且高效地控制各個照明場景。

Scene Panels

Customize your lighting environment with ease using scene panels, creating tailored atmospheres for various occasions.

場景模式

使用場景模式輕鬆自訂您的照明環境，為各種場合營造量身定制的氛圍。

Robo series wireless protocol
Robo 系列無線通訊協定

	ZigBee LynxPro	**Bluetooth** LynxLite	**2.4G** Remote control 遙控器
Radio 無線通信技術	DSSS	FHSS	FHSS
Range (node to node) 範圍 (點到點)	15-100 M	15-30 M	15 M
Network Topology 網路架構	Mesh 網狀架構	Mesh 網狀架構	Mesh 網狀架構
Extendability 可擴展性	YES 是	YES (add Gateway / cloud) 是 (新增網關 / 雲端)	NO 否
Gateway 網關	YES 是	NO (depending on conditions) 否（視情況而定）	NO 否
APP System APP 系統	Android	IOS	N/A
Wifi Environment Wifi 環境	NO 否	NO (cloud pending) 否 (雲端待定)	NO 否

Note 備註

*ON’s ZigBee system can connect another brand’s ZigBee fixtures (standard ZigBee protocol), not all fixtures must be from ON.
*ON 的 ZigBee 系統可以連接其他品牌的 ZigBee 燈具 (標準 ZigBee 協定)，但並非所有燈具都必須來自 ON。

Diverse control options

The Robo series fixtures offer diverse control options based on the application scenario. The 2.4GHz remote control efficiently handles basic functions for a smaller number of luminaires, including on/off, dimming, color temperature setting, and grouping. It facilitates motorized beam adjustment through turning, tilting, and zooming. For medium sized lighting applications, the LynxLite Bluetooth app (iOS) allows the creation, saving, and recalling of lighting scenes. Large scale scenarios benefit from the LynxPro app (Zigbee) for Android, providing advanced functions like automation, scheduling, sensor recording and calibration, as well as room plan creation and management. DMX control is also available for extensive projects. This solution allows the customer to easily integrate the luminaires in a number of different building automation systems hence allowing a good option to control ON ’s fixtures with other smart controlled products .

多樣化的控制選項

Robo 系列燈具可根據應用場景提供多樣化的控制選項。2.4GHz 遙控器可有效地處理較少數量燈具的基本功能，包括開啟 / 關閉、調光、色溫設定和群組。它還可透過轉動、傾斜和縮放來方便電動光束調整。對於中等規模的照明應用，LynxLite 藍牙應用程式 (iOS) 可建立、儲存和調用照明場景。適用於 Android 的 LynxPro 應用程式 (Zigbee) 可提供自動化、排程、感測器記錄與校準，以及房間規劃建立與管理等進階功能，讓大型場景獲益良多。DMX 控制也適用於大型專案。此解決方案可讓客戶輕鬆地將燈具整合至多種不同的建築自動化系統中，因此是控制 ON 燈具與其他智慧型控制產品的最佳選擇。

Application Recommendation
應用推薦

Robo Series **Robo 系列**	**Big Site 大型場域** Ceiling height 6–8m 100+ fixtures 天花板高度 6-8 公尺 100 個以上的燈具	**Medium Site 中型場域** Ceiling height 4–6 m 30 – 100 fixtures 天花板高度 4-6 公尺 30-100個燈具	**Small Site 小型場域** Ceiling height 3–4 m 1–30 fixtures 天花板高度 3-4 公尺 1-30個燈具
Frequently changing dynamic lighting scenarios (e.g. car showroom) 經常變化的動態照明場景 (如汽車陳列室)	LynxPro**	LynxPro** LynxLite* 2.4G	LynxPro** LynxLite* 2.4G
Repeatedly used lighting scenarios (eg. ballroom, lobby, international conference room) 重複使用的照明場景 (如：宴會廳、大廳、國際會議室)	LynxPro**	LynxPro** LynxLite*	LynxPro** LynxLite*
Occasional lighting adjustments (e. g. museum, Gallery, shop window) 偶爾的照明調整場景（如博物館、藝廊、商店櫥窗）	LynxPro** 2.4G	LynxPro** LynxLite* 2.4G	LynxPro** LynxLite* 2.4G

Note 備註

* LynxLite (Bluetooth 藍牙)
** LynxPro (ZigBee)

LynxPro

Discover supreme lighting control for Zigbee with LynxPro, our cutting-edge Android application. Tailored to meet the demands of large-scale projects with over 100 fixtures, LynxPro provides a comprehensive solution. Whether it's utilizing pre-programmed scenes or schedules, or manually switching individual fixtures or groups, LynxPro is your all-in-one lighting companion.

使用我們最先進的 Android 應用程式 LynxPro 探索 Zigbee 的卓越照明控制。LynxPro 專為大型項目設計，支援超過 100 個燈具，提供全面的解決方案。無論是利用預設的場景或排程，還是手動控制個別燈具或分組，LynxPro 都是您全方位的照明夥伴。

COMPLETE MANAGEMENT 完整的管理系統

Seize command with LynxPro, an app that turns your mobile phone or tablet into the control center for all your lighting needs. Whether you're creating groups, configuring individual fixtures, or saving scenes, LynxPro gives you complete control over the Robo series functions. Easily adjust rotation, panning, zooming, dimming, and light temperature.

盡情使用 LynxPro 掌握燈具，這款應用程式可將您的手機或平板電腦轉變為控制中心，激發您所有的照明靈感。無論您是設定群組、配置單一燈具還是保存場景，LynxPro 都可以讓您隨心所欲的控制 Robo 系列燈具。只需透過系統即可旋轉、平移、縮放、調整亮暗和設定燈具色溫，打造全面且個人化的照明系統。

SIMPLE MOTOR CONTROL 簡單的電動控制

Explore the ease of positioning the motorized fixtures through the LynxPro operating stepper motors and precisely aligning the light beam. Tilt and rotate the light source vertically and horizontally. Motorized zoom models provide remote adjustment of the beam angle, ensuring a smooth and user-friendly operation with clear pictograms guiding you through fixture movement adjustments. Elevate your lighting experience with LynxPro.

透過一步步地操作 LynxPro 來調整電動燈具並精確地控制光束。包含垂直和水平傾斜和旋轉光源。變焦電動燈具提供光束角度的遠端調整，確保平穩且易上手的操作，並透過視覺化圖形協助您移動燈具。使用 LynxPro 可以更好地提升您的照明體驗。

SENSITIVE LIGHTING CONTROL 靈敏的照明控制

Experience intuitive lighting mastery with LynxPro's "Light Control" panel, where modern control is at your fingertips. Smoothly adjust light intensity using the user-friendly slider, and tailor color temperature with a dedicated control. Craft the perfect lighting ambiance in an instant with just a few clicks and swipes. Unleash your creativity through LynxPro's simplified and intuitive lighting control.
LynxLite

使用 LynxPro 的燈光控制面板體驗直覺的控制系統，指尖之間即可實現燈光控制。易於使用的滑桿可平滑地調整光線強度，並使用專用畫面自訂色溫。只需點擊幾下和滑動手指即可營造出完美的照明氛圍。透過 LynxPro 簡化且直覺的照明控制釋放您的創造力。

LynxLite

LynxLite offers an intuitive way to oversee and command all RoboRadar models. Whether it's rotation, swiveling, dimming, or adjusting the light color, these functions are all accessible through the app. Using your iPhone or iPad, you can easily group fixtures, toggle individual fixtures, or instantly activate pre-configured lighting scenarios with a simple touch. LynxLite ensures complete control across all your iOS devices, providing a user-friendly experience for managing your RoboRadar luminaires.

LynxLite 提供了一種直覺的方式來監控所有 RoboRadar 模型。無論是旋轉、旋轉、調光或調整燈光顏色，這些功能都可以透過應用程式存取。使用 iPhone 或 iPad，您可以輕鬆對燈具進行分組、切換單個燈具，或透過簡單的觸控立即啟動預先配置的照明場景。 LynxLite 確保對所有 iOS 裝置進行完全控制，為管理 RoboRadar 燈具提供使用者友善的體驗。

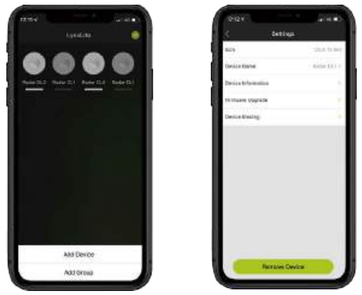

COMPLETE MANAGEMENT 完整的管理系統

LynxLite offers an intuitive way to oversee and command all RoboRadar models. Whether it's rotation, swiveling, dimming, or adjusting the light color, these functions are all accessible through the app. Using your iPhone or iPad, you can easily group fixtures, toggle individual fixtures, or instantly activate pre-configured lighting scenarios with a simple touch. LynxLite ensures complete control across all your iOS devices, providing a user-friendly experience for managing your RoboRadar luminaires.

LynxLite 提供了一種直覺的方式來監控所有 RoboRadar 模型。無論是旋轉、旋轉、調光或調整燈光顏色，這些功能都可以透過應用程式存取。使用 iPhone 或 iPad，您可以輕鬆對燈具進行分組、切換單個燈具，或透過簡單的觸控立即啟動預先配置的照明場景。 LynxLite 確保對所有 iOS 裝置進行完全控制，為管理 RoboRadar 燈具提供使用者友善的體驗。

SIMPLE MOTOR CONTROL 簡單的電動控制

Focus the light beam by precisely manipulating the integrated stepper motors within the fixtures with the LynxLite app. Smoothly tilt and rotate the luminaire vertically and horizontally. LynxLite simplifies adjustments through easy-to-use sliders, ensuring an intuitive and seamless control experience.

透過 LynxLite 應用程式精確操控燈具內的馬達來聚焦光束，包含了垂直、水平傾斜與旋轉燈具。LynxLite 透過視覺化的滑桿圖示簡化了整體調整步驟，確保直覺、無縫的使用者體驗。

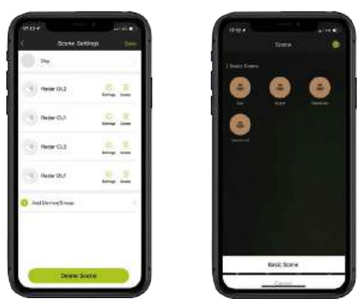

SENSITIVE LIGHTING CONTROL 靈敏的照明控制

With LynxLite, efficiently manage your lighting system using your iOS-enabled smartphone or tablet. Simply select the desired fixtures from the list and control them with a touch of your finger. Tailor the atmosphere swiftly for any occasion by adjusting the light intensity and color temperature. LynxLite ensures an intuitive operation, placing lighting customization at your fingertips.

透過 LynxLite，您可以使用支援 iOS 的智慧型手機或平板電腦來有效管理您的照明設備。只需從清單中選擇所需的燈具，然後用手指輕輕滑動，即可操控它們。透過調整光線強度及色溫，即可快速轉換場域為適合的氛圍。 LynxLite 直覺的操作讓燈光的客製化變得觸手可及。

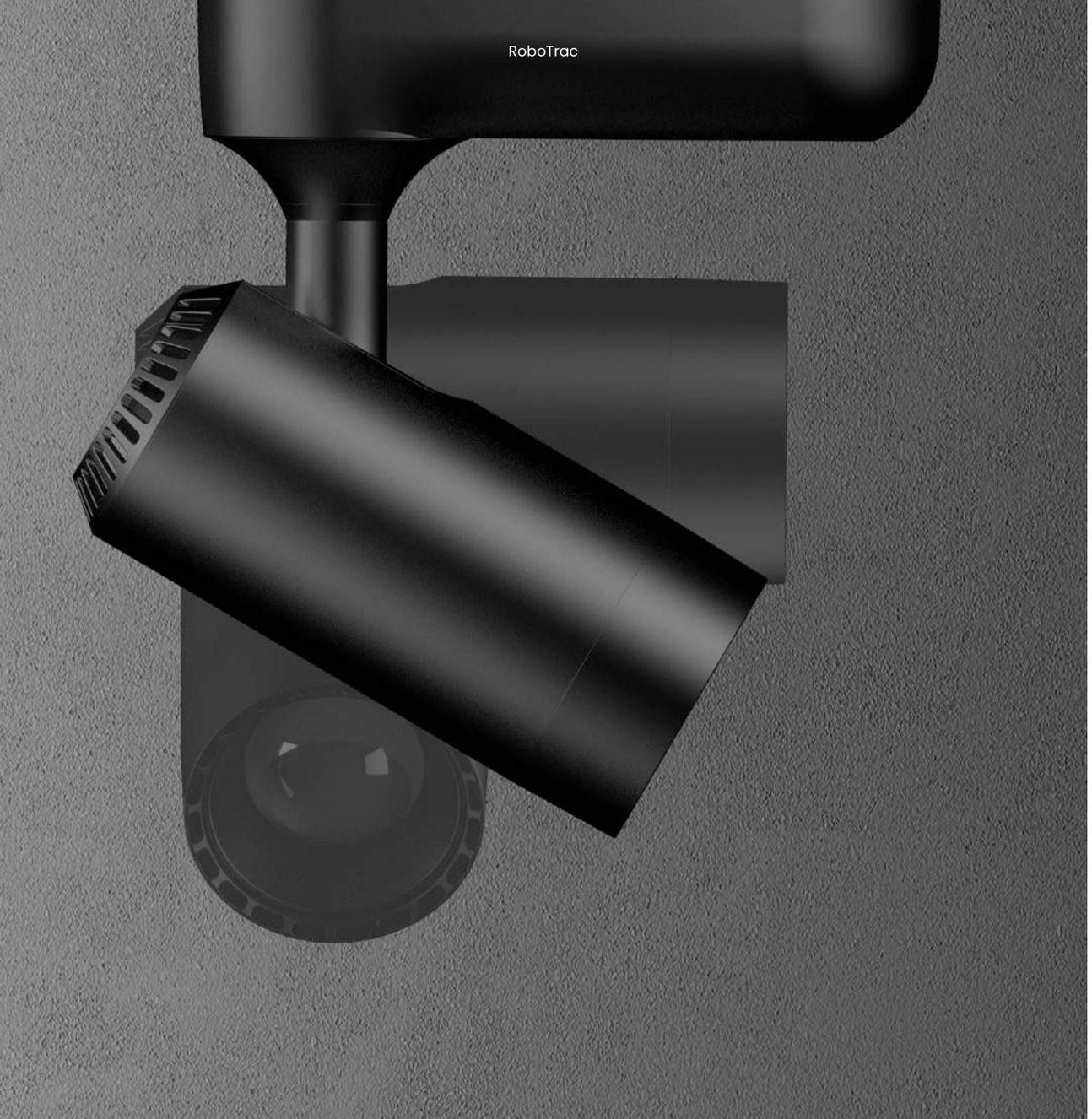

DESIGN PLUS
powered by: light + building

RoboTrac

The RoboTrac Series brings the ultimate flexibility to the high-end commercial applications with high ceiling or hard to reach locations, such as hotel lobbies, ballrooms, restaurants or any other public spaces.

RoboTrac 系列為天花板較高或難以到達位置的高階商業應用，例如飯店大廳、宴會廳、餐廳或任何其他公共空間，帶來極致的彈性。

RoboTrac

ZigBee 2.4G

Picture 圖片	Model Name 型號	Power Factor 整燈功率	Luminous Flux 光通量	BA. 光束角	Beam Type 光束類型	CCT 色溫
	T321 *	28W	1600lm	12-55°		2700K 4000K 3000K Tunable
	T322	28W	2260lm	7°		2700K 4000K 3000K
	T323	28W	2000lm	24°		2700K 4000K 3000K Tunable

Accessories 配件

White/白 Black/黑

Honeycomb is available for model with * fixtures only. 僅帶 * 型號燈具可使用蜂巢網。

Honeycomb
蜂巢網

ZigBee Gateway
ZigBee 網關

2.4G Remote Control
2.4G遙控器

ZigBee is available for Android only. ZigBee僅適用於安卓系統

Download LynxPro APP
下載 LynxPro APP

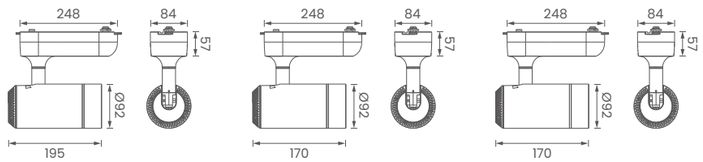

T321 T322 T323

*Lumen measured of the system (3000K).
*Technical information may change please refer to the datasheet.
*以上流明測量值以3000K為測量數據。
*技術信息可能會發生變化，請參閱規格書。

Unit 單位 | mm 公釐

Narrow Spot 極窄角 : <10° Spot 窄角 : 11°-20° Medium Spot 中角 : 21°-30° Wide 廣角 : 31°-60° Wide Flood 超廣角 : 61°-80°
Flood 泛光 : >81° Wallwash 洗牆 Oval 橢圓角 Zoomable 調焦角 Beam Shaper 切光

CRI90 Dimming Tunable 355° 90° IP20

RoboCan

The Robocan Series with the wireless control system and robust motors inside enable the unrestricted illuminating direction of light in the room. The RoboCan series creates entirely new possibilities for changing the lighting atmosphere at any time.

RoboCan 系列配備無線控制系統和內部堅固耐用的馬達，可讓室內光線的照射方向不受限制。RoboCan 系列為隨時改變照明氛圍創造了全新的可能性。

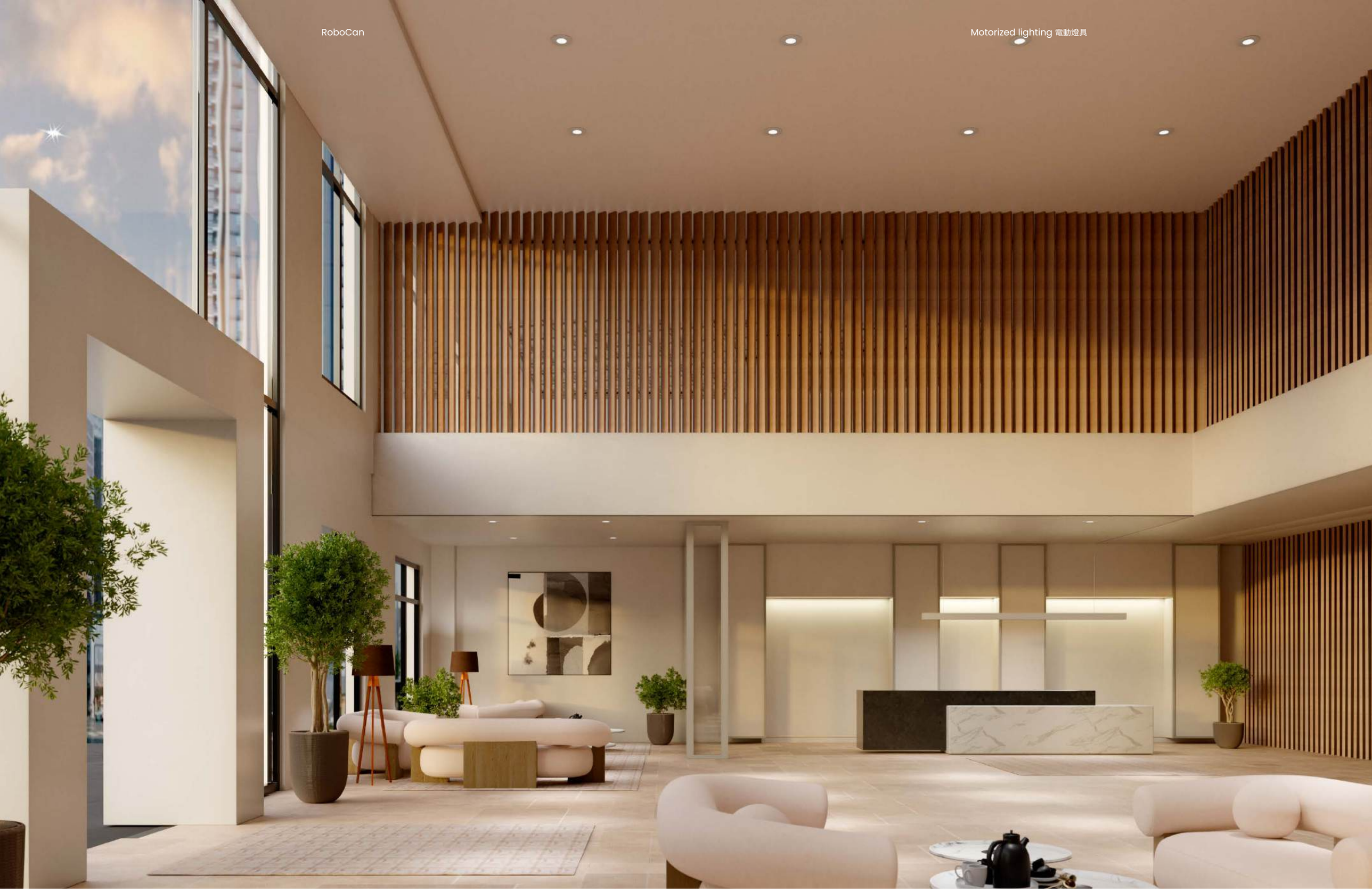

RoboCan

ZigBee 2.4G DMX DMX

Picture 圖片	Model Name 型號	Power Factor 整燈功率	Luminous Flux 光通量	BA. 光束角	Beam Type 光束類型	CCT 色溫
	D631	28W	1830lm	7°		2700K 3000K 4000K
	D632	28W	1830lm	24°		2700K 3000K 4000K Tunable

Accessories 配件

White/白 Black/黑

ZigBee Gateway
ZigBee 網關

2.4G Remote Control
2.4G遙控器

ZigBee is available for Android only. ZigBee僅適用於安卓系統

Download LynxPro APP
下載 LynxPro APP

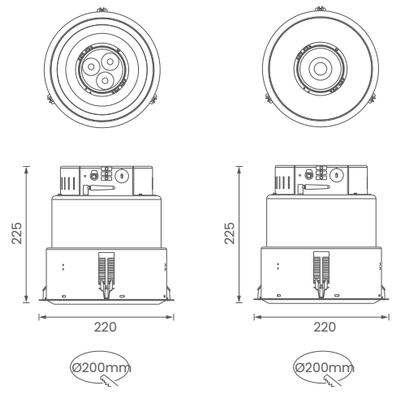

D631 D632

＊Lumen measured of the system (3000K).
＊Technical information may change please refer to the datasheet.
＊以上流明測量值以3000K為測量數據。
＊技術信息可能會發生變化，請參閱規格書。

Unit 單位 | mm 公釐

Narrow Spot 極窄角 : <10° Spot 窄角 : 11°-20° Medium Spot 中角 : 21°-30° Wide 廣角 : 31°-60° Wide Flood 超廣角 : 61°-80°

Flood 泛光 : >81° Wallwash 洗牆 Oval 橢圓角 Zoomable 調焦角 Beam Shaper 切光

CRI90 Dimmable Tunable 355° 15° IP20

RoboRadar

The RoboRadar series is an electric downlight with a simple design that fits perfectly into the ceiling and allows you to adjust the direction and angle of illumination through electric controls without having to manually adjust the mounting position. The lamps are especially suitable for window displays and showpieces that need to be changed periodically, providing you with the most convenient lighting solution to make your display space more outstanding.

RoboRadar 系列為電動崁燈，具備簡潔的外觀設計，能夠完美貼合天花板，無需手動調整安裝位置即可透過電動控制調整燈具的照射方向和角度。這款燈具特別適合用於需要週期性更換的櫥窗陳列或展示精品，提供您最便捷的照明解決方案，讓您的展示空間更加出色。

D691

D69X

C43X

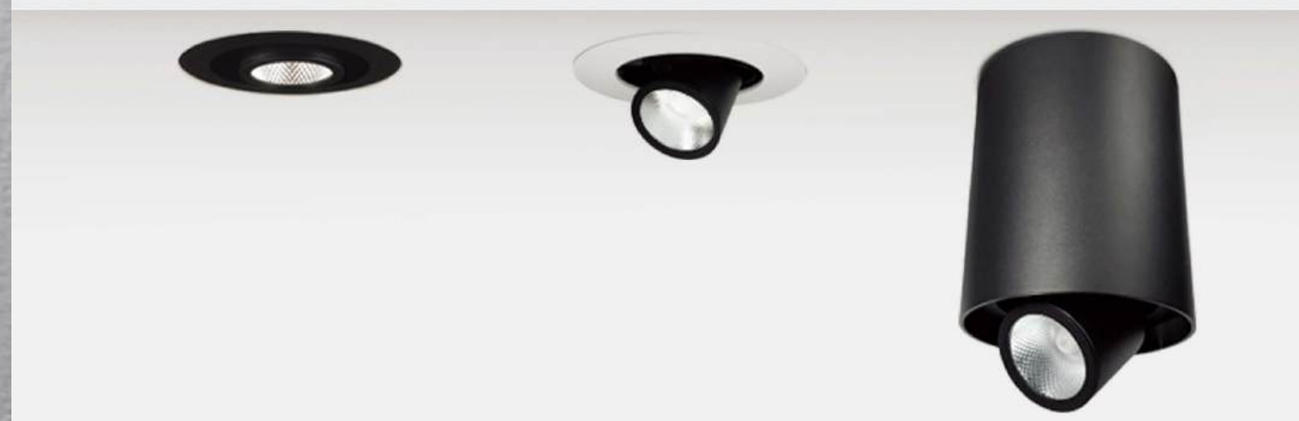

DESIGN PLUS
powered by: light+building

reddot winner 2021
lighting design

STILLE NACHT,
HEILIGE NACHT
-
ZEIT FÜR HYGGE
OPENING TIMES

RoboRadar

Bluetooth | 2.4G | DMX DMX

Picture 圖片	Model Name 型號	Power Factor 整燈功率	Luminous Flux 光通量	BA. 光束角	Beam Type 光束類型	CCT 色溫
	D691	20W	1650lm	15°/24°/36°		2700K 4000K 3000K Tunable
	D69X	20W	1650lm	15°/24°/36°		2700K 4000K 3000K Tunable
	C43X	20W	1650lm	15°/24°/36°		2700K 4000K 3000K Tunable

Accessories 配件

White/白 Black/黑

2.4G Remote Control
2.4G遙控器

Bluetooth is available for IOS only. Bluetooth僅適用於IOS系統

Download LynxLite APP
下載 LynxLite APP

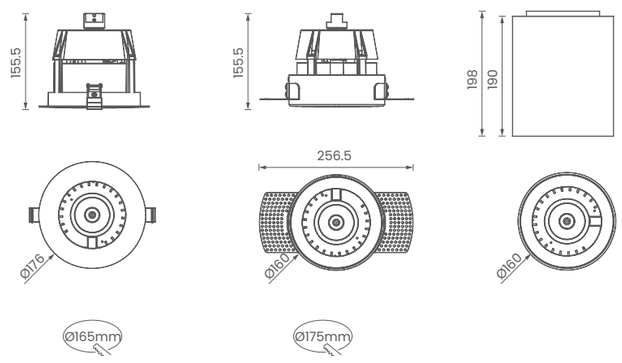

D691 D69X C43X

*Lumen measured of the system (3000K).
*Technical information may change please refer to the datasheet.
*以上流明測量值以3000K為測量數據。
*技術信息可能會發生變化，請參閱規格書。

Unit 單位 | mm 公釐

Narrow Spot 極窄角 : <10° | Spot 窄角 : 11°-20° | Medium Spot 中角 : 21°-30° | Wide 廣角 : 31°-60° | Wide Flood 超廣角 : 61°-80°
Flood 泛光 : >81° | Wallwash 洗牆 | Oval 橢圓角 | Zoomable 調焦角 | Beam Shaper 切光

CRI90 Dimming Tunable 355° 90° IP20

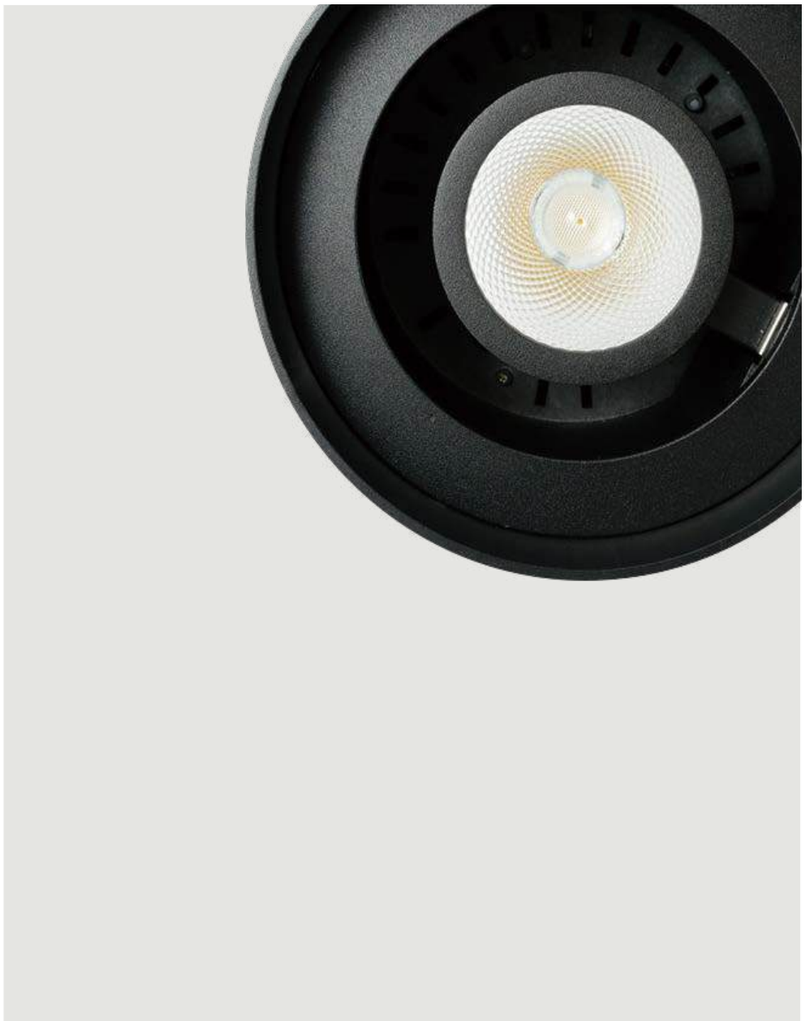

RoboFocus

The RoboFocus Series is an innovative luminaire designed to stand as the epitome of adaptability for the retail sector. Tailor your lighting experience with exchangeable optic filters of 15°, 24°, 30°, and 45°, offering versatility in highlighting specific areas.

RoboFocus 系列是創新的燈具，其設計是零售業適應性的縮影。可更換 15°、24°、30° 和 45° 的光學濾片，為您量身打造照明體驗，提供突顯特定區域的多功能性。

RoboFocus

2.4G DMX DMX

Picture 圖片	Model Name 型號	Power Factor 整燈功率	Luminous Flux 光通量	BA. 光束角	Beam Type 光束類型	CCT 色溫
	T374	15W	1035lm	15°		2700K 4000K 3000K Tunable

White/白 Black/黑

Accessories 配件

2.4G Remote Control
2.4G遙控器

Ø58 Magnetic filter | For models T374
Ø58 磁吸濾片 | 適用於型號T374

20° 30° 45°

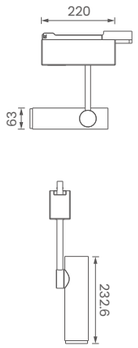

T374

*Lumen measured of the system (3000K).
*Technical information may change please refer to the datasheet.
*以上流明測量值以3000K為測量數據。
*技術信息可能會發生變化，請參閱規格書。

Unit 單位 | mm 公釐

Narrow Spot 極窄角 : <10° | Spot 窄角 : 11°-20° | Medium Spot 中角 : 21°-30° | Wide 廣角 : 31°-60° | Wide Flood 超廣角 : 61°-80°
Flood 泛光 : >81° | Wallwash 洗牆 | Oval 橢圓角 | Zoomable 調焦角 | Beam Shaper 切光

CRI90 Dimming Tunable 355° 90° IP20

Strip

ON | OFF · Triac 可控硅 · 0-10V · DALI · AMO Smart Lighting

Picture 圖片	Model Name 型號	Name 名稱	Power Factor 整燈功率	Length 長度	Number of Light 燈數	BA. 光束角	Beam Type 光束類型	CCT 色溫
	6ST2-4109-01	AMO Dual Color Strip AMO 雙色燈帶	10W/M	5M	192 lights/M	Flood 泛光		Tunable
	6SR1-1109-01	AMO RGB Color Strip AMO RGB燈帶	15W/M	5M	60 lights/M	Flood 泛光		RGB
	6SR2-1109-01	AMO Dual Color + RGB Strip AMO 雙色溫 + RGB燈帶	20W/M	5M	60+120 lights/M	Flood 泛光		Tunable RGB
	6S27-2109-01 6S30-2109-01 6S40-2109-01 6S50-2109-01	Single Color Strip 單色溫燈帶	10W/M	5M	120 lights/M	Flood 泛光		2700K 3000K 4000K 5000K

Note 備註

All the tapes are made of 3M double-sided transparent non-marking waterproof and high-temperature resistant adhesive tapes, which have better adhesion and adhesive retention.
燈帶皆使用3M雙面透明無痕防水耐高溫膠帶，具備較好的黏性和持黏性。

＊Lumen measured of the system (3000K).
＊Technical information may change please refer to the datasheet.
＊以上流明測量值以3000K為測量數據。
＊技術信息可能會發生變化，請參閱規格書。

Narrow Spot 極窄角 : <10° · Spot 窄角 : 11°-20° · Medium Spot 中角 : 21°-30° · Wide 廣角 : 31°-60° · Wide Flood 超廣角 : 61°-80°
Flood 泛光 : >81° · Wallwash 洗牆 · Oval 橢圓角 · Zoomable 調焦角 · Beam Shaper 切光

CRI90 · Dimmable

5LLX-Q114-01 Track Mounting Method
5LLX-Q114-01 軌道安裝方式

＊X is the track length code, 1 for 1 metre, 2 for 1.5 metres and 3 for 2 metres.
＊X 為軌道長度代號，1 代表 1 米、2 代表 1.5 米、3 代表 2 米。

There are three types of track mounting; surface mounting, embedded mounting and suspension mounting. Installer choose the track type based on the space and ceiling design at the site.
軌道安裝方式分為表面安裝、崁入安裝及懸吊安裝。根據環境選擇不同軌道安裝方式，滿足各種需求。

Surface mounting
表面安裝

Embedded mounting
崁入安裝

Suspension mounting
懸吊安裝

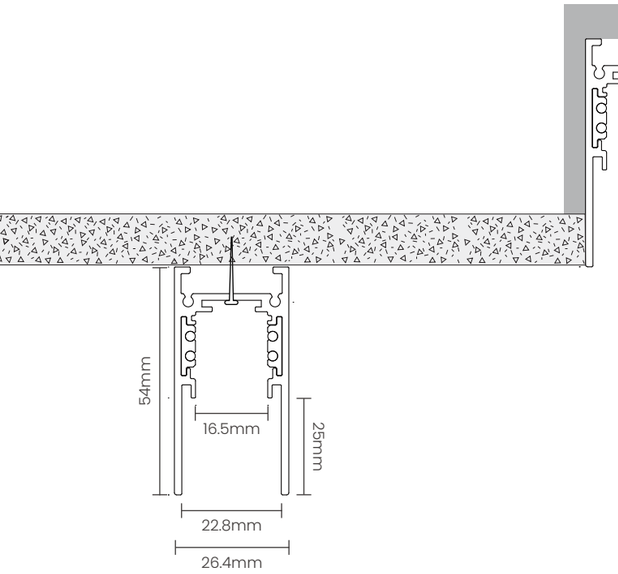

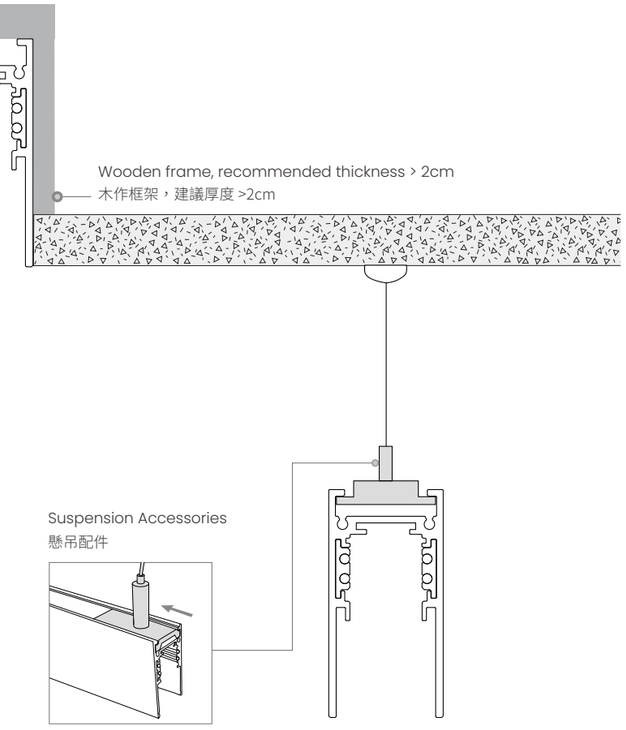

Magnetic Track Accessories
磁吸軌道配件

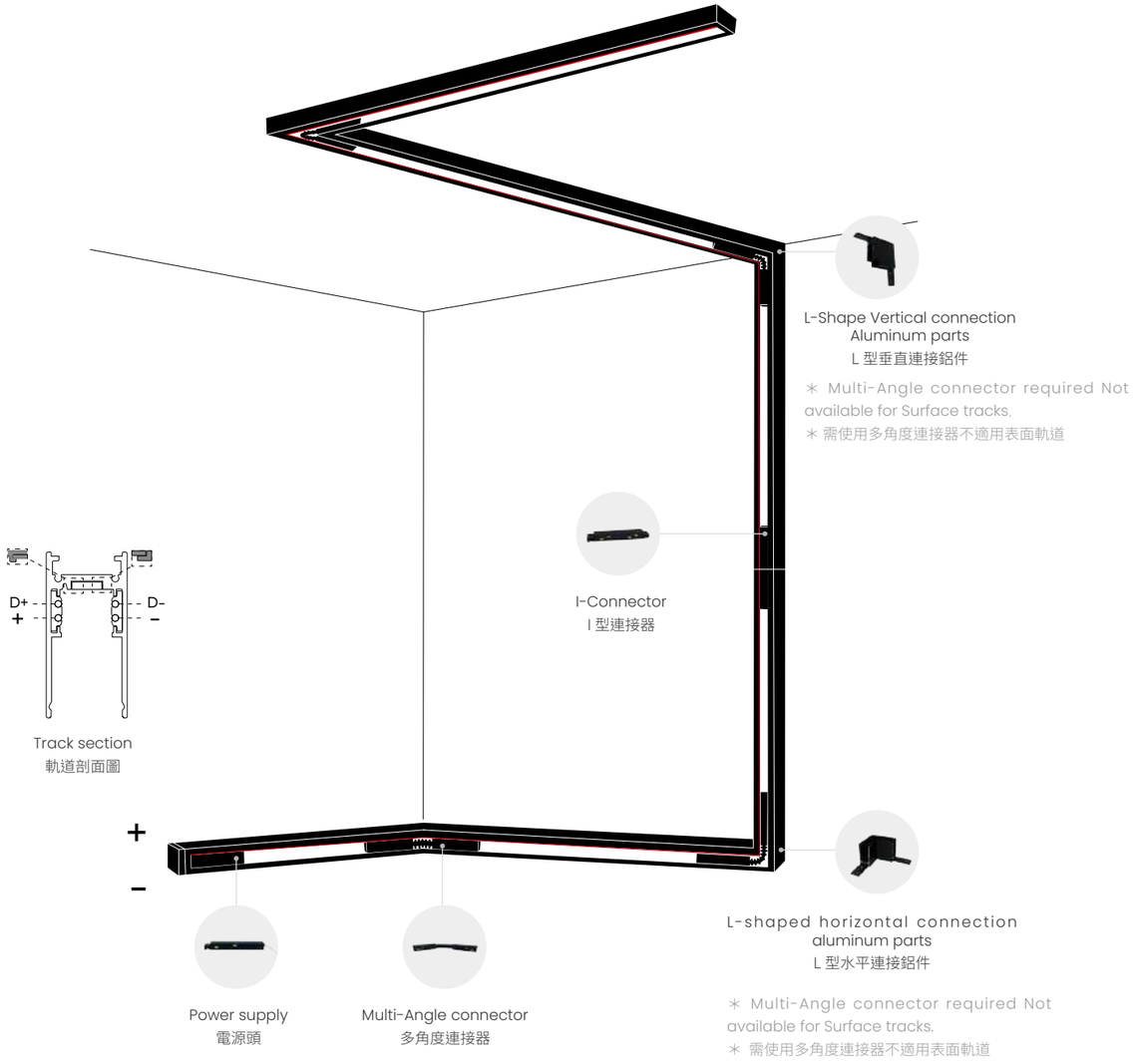

＊0-10V lamps need to pay attention to the positive and negative levels to be energized, and the D+D- control wire from the power supply head is required.
＊DALI fixtures do not need to pay attention to the positive and negative levels to be energized, the power supply head needs to come out of the D+D-control wire.
＊For assembly method, please install the magnetic rail fittings.
＊0-10V 燈具需留意正負級才能通電，電源頭需再出 D+D- 控制線。
＊DALI 燈具不需留意正負級即可通電，電源頭需再出 D+D- 控制線。
＊組裝方法請磁吸軌道配件安裝。

Magnetic Track Accessories 磁吸軌道配件

Picture 圖片	Name 品名	Model Name 型號	Size 尺寸	Note 備註
	Power supply 電源頭	5201-Q114-01	143.7mm 	N/A
	I-connector I型連接器	5202-Q114-01	142.8mm 	N/A
	Multi-angle connector 多角度連接器	5203-Q114-01	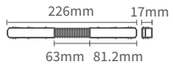	N/A
	T-connector T型連接器	5205-Q114-01	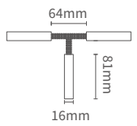	To be used with T-level aluminum connections only 搭配T型水平連接鋁件使用
	L-shaped horizontal connection aluminum parts L型水平連接鋁件	5208-Q114-01	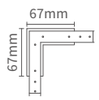	To be used with multi-angle connector 須搭配多角度連接器使用
	L-shape vertical connection Aluminum L型垂直連接鋁件	5209-Q114-01	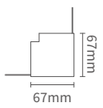	To be used with multi-angle connector 須搭配多角度連接器使用
	T-horizontal connection Aluminum T型水平連接鋁件	5211-Q114-01	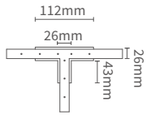	To be used with T-connector 須搭配T型連接器使用
	Aluminum cross level connection 十字水平連接鋁件	5210-Q114-01	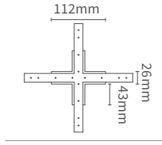	To be used with 2 multi-angle connectors 須搭配2個多角度連接器使用
	Suspension kit 懸吊配件組	5213-Q114-01	Size: Ceiling box 5cm, total length 200cm 尺寸：吸頂盒5cm，總長200cm	Suggested number of tracks: 1M/2 sets; 2M/3 sets 建議軌道搭配數量：1M/2組；2M/3組
	I-connection aluminum I型連接鋁件	5212-Q114-01	Size: L 8.2cm x W 2.3cm x H 0.6cm 尺寸： 長8.2cm x寬2.3cm x高0.6cm	When using a suspension set, the track connection requires an aluminum I-connector. 使用懸吊組時，軌道連接需搭配 I型連接鋁件

Magnetic Track Accessories mounting method
磁吸軌道配件安裝

Power Supply | I-Connector
電源頭 | I 型連接器

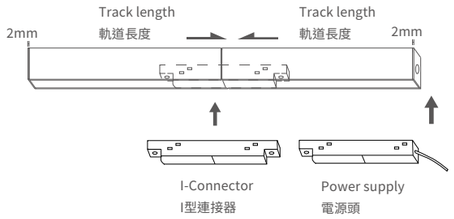

L-Shape Horizontal Connectors | Multi-Angle Connectors
L 型水平連接鋁件 | 多角度連接器

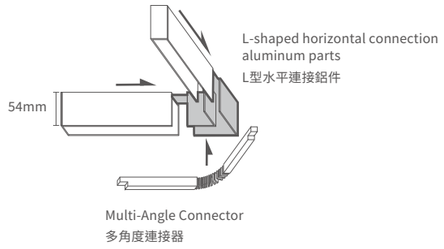

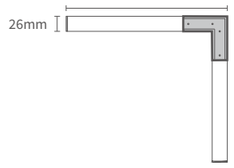

L-Shape Vertical Connectors | Multi-Angle Connectors
L 型垂直連接鋁件 | 多角度連接器

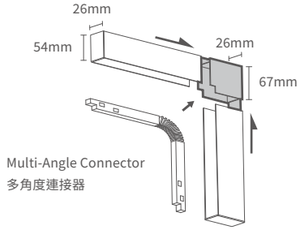

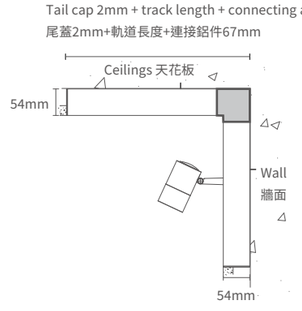

Magnetic track accessories mounting method
磁吸軌道配件安裝

Aluminum Cross Level Connection |Multi-angle connector
十字水平連接鋁件 | 多角度連接器

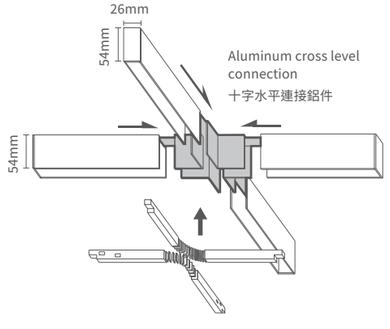

Multi-angle connector*2
多角度連接器*2

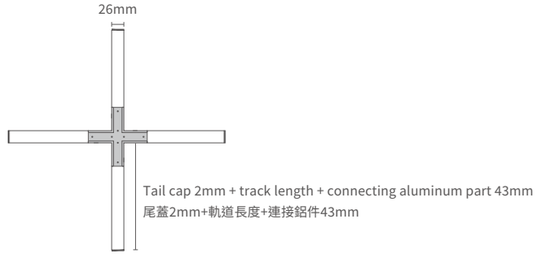

T-horizontal connection aluminum | T-connector
T 型水平連接鋁件 | T 型連接器

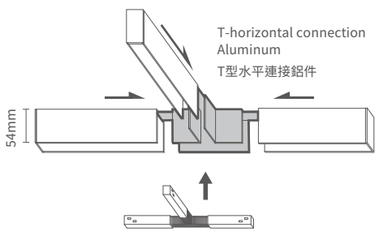

T-connector
T型連接器

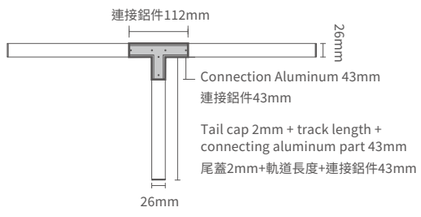

Installation Precautions
安裝注意事項

1. Magnetic tracks need to be cut based on the design requirements pay attention that the track copper and Magnetic track to be cut in the same length to ensure smooth current transmission between the track elements. (Power head, track, and copper)

2. During the installation, please insure the ceiling surface is flat, holes in line and in the right size. avoid very tight screwing which might cause deformation of the track system.

3. During the installation of connection accessories, the accessories must be installed to the bottom and must not be tilted to avoid abnormal conditions such as poor contact, inability to power on. etc.

4. For 0-10V and DALI control mode, please pay attention that the magnetic power supply head D+ D- needs to be out of the line to the control equipment, and the installation of the 0-10V magnetic light fixture should align the positive and negative poles. DALI installation for magnetic fixture does not need to follow positive and negative poles.

5. For suspension mounting, pay attention to each end of the track pieces that should be installed with a set of suspension fittings, 1M/2 sets; 2M/3 sets; 3M/4 sets and so on. The track and the track articulation need to add the I-type connection to avoid any misalignment that might cause a failure to power on or control the lights. please follow the illustration below.

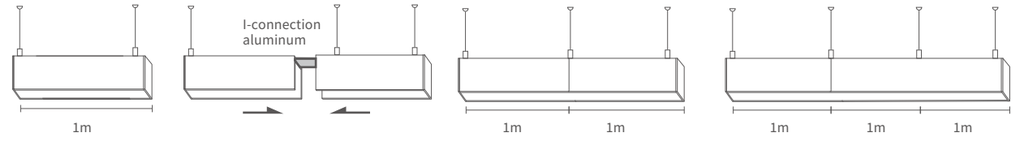

6. After installing the tracks, it is recommended to use a lamp to test that each section of the tracks can pass normally.

1.磁吸軌道因設計規劃需要裁切長度時，切記軌道內銅條和軌道裁切一樣長度，避免安裝電源頭與連接器無法導通。

2.磁吸軌道安裝在天花板上或預埋孔位時，請先檢查天花板表面是否平整、預埋孔位尺寸是否符合,避免出現歪斜或者變形的可能性。

3.在安裝連接配件時，必須落實配件安裝到底部，不可有翹起的狀態，避免出現接觸不良無法通電及控制設備訊號不穩等異常狀態。

4.若規劃 0-10V 、 DALI 控制方式時，請注意磁吸電源頭 D+ D- 需出線至控制設備，0-10V 磁吸燈具安裝須注意正負極之分, DALI 磁吸燈具安裝則無需分正負極。

5.規劃懸吊方式時,請注意軌道每米的兩端須各安裝懸吊配件一組，1M/2組；2M/3組；3M/4組以此類推。軌道與軌道銜接時需要加裝 I型連接鋁件固定，避免軌道有高低差異導致接觸不良無法通電及控制設備訊號不穩等異常狀態。連接方式如下圖：

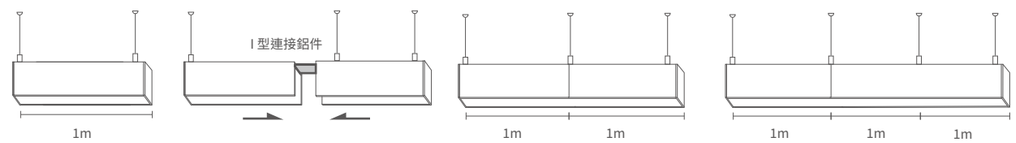

6.安裝完軌道後，建議先使用一盞燈具測試每一段軌道皆可正常導通。

Power Supply Connection Position Description
電源頭接線位置說明

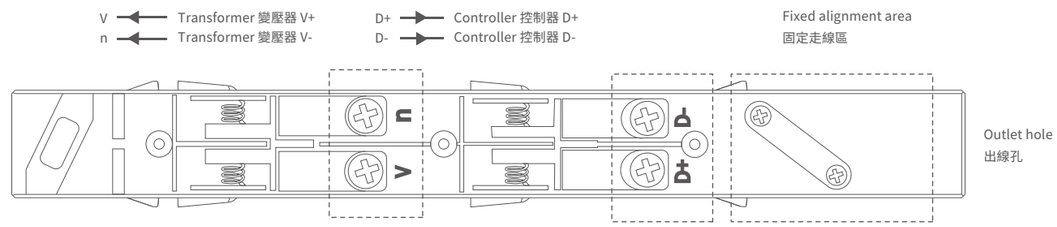

Product wiring method
產品接線方式

Non-dimmable lighting wiring method
不調光燈具接線方式

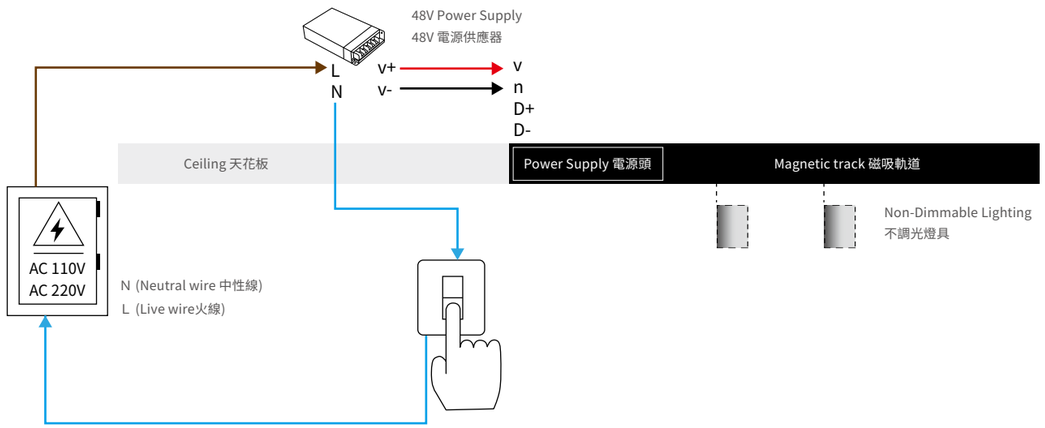

0-10V 、DALI lighting wiring method
0-10V 、DALI 燈具接線方式

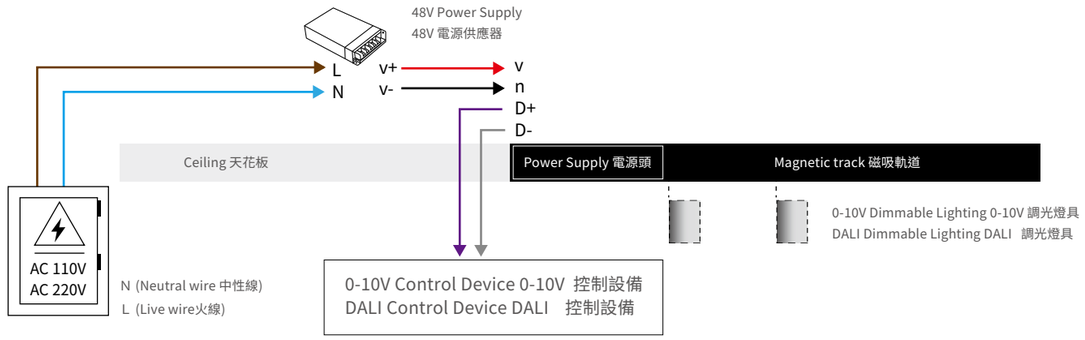

＊ Please note that the magnetic power head D+ D- should be wired to the control equipment, when 0-10V magnetic lamps are installed to the track, please pay attention to the positive and negative poles; DALI magnetic lamps are installed without the need to divide the positive and negative poles.
＊ D+ D- outlet color, please follow the on-site electrician wiring is the main.
＊ 請注意磁吸電源頭 D+ D- 需出線至控制設備，0-10V 磁吸燈具安裝到軌道時，須注意正負極之分； DALI 磁吸燈具安裝則無需分正負極。
＊ D+ D- 出線顏色，請依照現場電工師傅配線為主。

Drop voltage table
線路長度壓降表

	Distance power supply /feeding unit(2*1.5mm²) 燈具與電源距離 / 電源線徑(2*1.5mm²)			
	5m	10m	20m	30m
Power supply (W) 電源 (W)	**Track length with ΔV ≤5.5%(m) 軌道長度建議範圍 ΔV ≤5.5%(m)**			
60W	50m	50m	50m	50m
100W	50m	50m	40m	25m
150W	50m	40m	20m	N/A
200W	40m	30m	N/A	N/A
250W	35m	20m	N/A	N/A

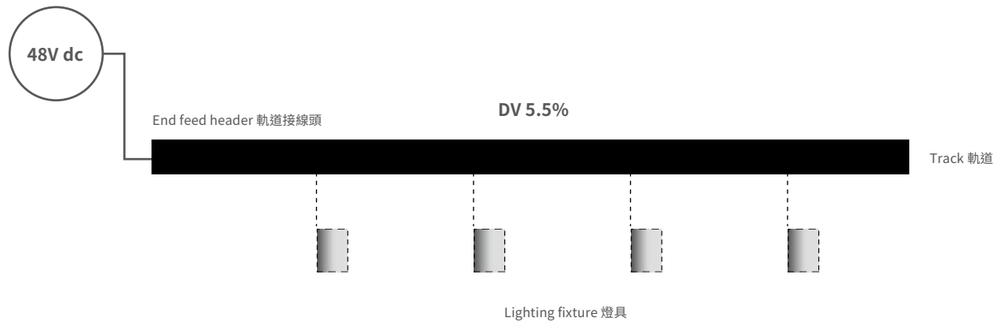

Location 公司據點

Taipei 台北

| Taipei Lighting Experience Center

| 台北展示中心
台北市內湖區行善路48巷56號1樓
1F., No. 56, Ln. 48, Xingshan Rd., Neihu Dist., Taipei City , Taiwan

Taichung 台中

| Taichung Lighting Experience Center

| 台中總部
台中市南屯區精科七路20號
No. 20, Jingke 7th Rd., Nantun Dist., Taichung City, Taiwan

| 汽車及照明銷售展示中心
台中市西屯區市政北二路 18-1 號
No. 18-1, Shizheng N. 2nd Rd., Xitun Dist., Taichung City, Taiwan

Shanghai 上海

| Shanghai Showroom

| 上海展示中心
上海市浦東新區启帆路 800 弄 3 號樓
Building 3, Lane 800, Qifan Road, Pudong New Area, Shanghai

Facebook

Website

LINE

Instagram

Cubeelighting Catalog 24|25

Copywriting 版權所有 | Cubeelighting
Version 版本 | 2.0 2024

Cubee Lighting Technology Co.Ltd.
三一照明科技股份有限公司

T +886-4-35009325
F +886-4-35009327
E info@cubeelighting.com
@Cubeelighting 2024

R3c887

三一照明科技

www.cubeelighting.com